Remote Controller

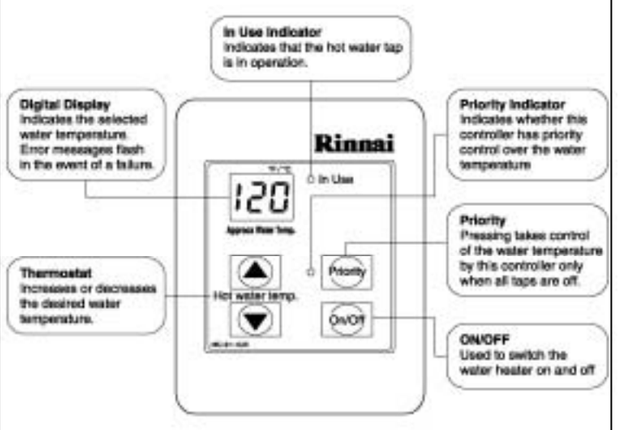

Diagnostic Use of Controller

1. To Display Maintenance Codes: Press the 'On/Off' button once to turn the controller off. Press and hold the 'On/Off' button followed by ▲ thermostat button to cycle through the maintenance codes.
2. To Display Water Flow through the water heater: Press the ▲ thermostat button and hold for 2 seconds and then press the 'On/Off' button while continuing to hold the ▲ thermostat button.
3. To Display Outlet Water Temperature: Press the ▼ thermostat button and hold for 2 seconds and then press the 'On/Off' button while continuing to hold the ▼ thermostat button.

To Change the Temperature Display from °F to °C (or °C to °F)

1. Press the 'On/Off' button once to turn the controller unit off. With the controller off press and hold the 'On/Off' button until the display changes to °C (°F), approximately 5 seconds.

To Turn Off the Sound (Mute)

1. To turn the sound off (mute) press and hold both the ▲ and ▼ thermostat buttons until an audible "beep" is heard, approximately 5 seconds.

GAS PRESSURE SETTING

(Ensure gas pressure check under Commissioning has been completed first !)
The regulator is electronically controlled and factory pre-set. **Under normal circumstances it does not require adjustment during installation. Make adjustments only if the unit is not operating correctly and all other possible causes for incorrect operation have been eliminated.**

1. Turn 'OFF' the gas supply.
2. Turn 'OFF' 120V power supply.
3. Remove the front cover from the appliance.
4. Check gas type using data plate on side of unit.
   If using spare PC board, check gas type switches (Fig.1) are in the correct position. (dip switch 1 of SW2 'ON' = NG, 'OFF' = LPG)
   See Dip Switch Settings section below.

Note: 'ON' towards right, 'OFF' towards left.

5. Attach pressure gauge to burner test point, located on the gas control. (Fig.2).
6. Turn 'ON' the gas supply.
7. Turn 'ON' 120V power supply.
8. If remote controllers are fitted, turn the unit 'ON' at the controller, select the maximum delivery temperature and open all available hot water taps full including the shower.
   (**CAUTION:** Ensure building occupants do not have access to hot water outlets during this procedure).
9. Set the Rinnai Water Heater to 'Forced Low' combustion by setting No.7 dip switch of the (SW1) set of dip switches to 'ON'. (Fig.3).
10. Check the burner test point pressure.
11. Remove rubber access plug and adjust the regulator screw on the modulating valve (Fig.4) as required in Table 1. Replace rubber access plug.
12. Set the Rinnai Water Heater to 'Forced High' combustion by setting both No. 7 and No. 8 dip switches of the bottom (SW1) set to 'ON'. (Fig.5). **Ensure maximum water flow !**
13. Check the burner test point pressure.
14. Adjust the high pressure Potentiometer (POT) on the Printed Circuit Board (PCB) as required to the pressure shown in Table 1.

IMPORTANT: Set dip switches 7 and 8 on the bottom (SW1) to 'OFF' to return the appliance to 'Normal' combustion. (Fig. 6).

15. Close hot water tap.
16. Turn 'OFF' the gas supply and 120V power supply.
17. Remove pressure gauge & replacing sealing screw.
18. Turn 'ON' the gas supply and 120V power supply.
19. Operate unit and check for gas leaks at test point.
20. Replace the front cover of the appliance.

Gas Pressure Setting

NOTE: For additional installation and commissioning information refer to Operation / Installation Manual

WARNING

THIS APPLIANCE MUST BE INSTALLED, SERVICED AND REMOVED BY AN AUTHORISED PERSON DURING PRESSURE TESTING OF THE CONSUMER PIPING ENSURE GAS COCK SITUATED BEFORE UNIT IS SHUT-OFF. FAILURE TO DO SO MAY RESULT IN SERIOUS DAMAGE TO THE APPLIANCE AND POSSIBLE INJURY.

APPLIANCE OPERATING PRESSURES

Table 1

	Water Inlet Max.	Gas Inlet Min./Max		Forced Low		Forced High	
		NAT.G	LPG	NAT.G	LPG	NAT.G	LPG
R98LSi	150 PSI	5"W.C. /10.5"W.C.	8"W.C. /13.5"W.C.	0.67"W.C.	0.83"W.C.	3.0"W.C.	3.7"W.C.
R98LSi-ASME							

COMMISSIONING

With all gas appliances in operation at maximum gas rate, the flowing inlet pressure at the incoming test point on the Rinnai Water Heater should read 5"W.C. - 10.5"W.C. on Natural Gas and 8"W.C. - 13.5"W.C. on Propane Gas. If the pressure is lower, the gas supply is inadequate and the appliance unit will not operate to specification. Check gas meter, regulator and pipework for correct operation/sizing and rectify as required.

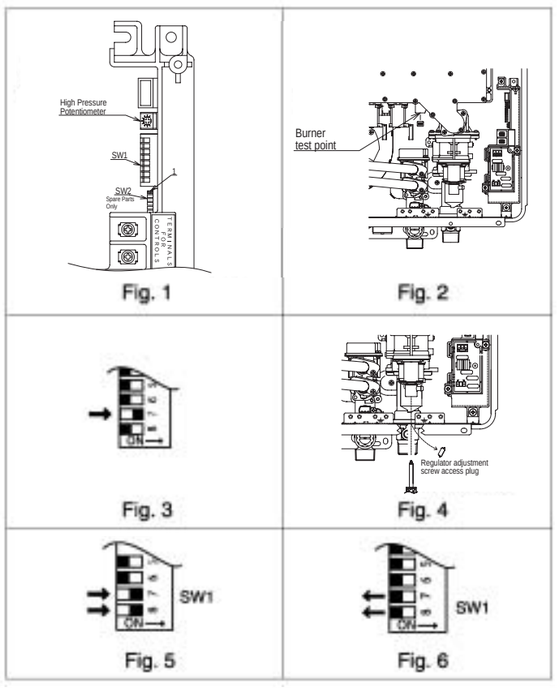

Fig. 1 Fig. 2 Fig. 3 Fig. 4 Fig. 5 Fig. 6

Troubleshooting

IMPORTANT SAFETY NOTES:
There are a number of (live) tests that are required when fault finding this product. Extreme care should be used at all times to avoid contact with energized components inside the water heater. **Only trained and qualified service agencies should attempt to repair this product.** Remember, before checking for resistance readings, you should disconnect the power source to the unit and isolate the item to be checked from the circuit (unplug it).

(SV1, SV2, SV3 and POV) Gas valve and Modulating solenoids: (Set meter above 2K)

Wire color	Voltage	Resistance	Connector #	Pin #'s
(Main) Pink - Black	11 ~ 13 VDC	24 ~ 28 ohms	H3	6 - 7
(SV1) Black - Red	11 ~ 13 VDC	37 ~ 43 ohms	H4	5 - 6
(SV2) Black - Orange	11 ~ 13 VDC	37 ~ 43 ohms	H5	4 - 6
(SV3) Black - Yellow	11 ~ 13 VDC	37 ~ 43 ohms	H6	3 - 6
(POV) Orange - Orange	2 ~ 15 VDC	67 ~ 81 ohms	H2	9 - 10

(M) Water Flow Control Device Servo or Geared Motor:

Red - Blue	11 ~ 13 VDC	22 ~ 28 ohms	F5	9 - 10
Grey - Brown	4 ~ 6 VDC	N / A	F5	5 - 7
Grey - Yellow	N / A	N / A	F5	5 - 8

NOTE: The grey wire listed above turns to black at F connector on the PCB.

(QS) Water Flow Sensor:

Black - Red	11 ~ 13 VDC	5.5 ~ 6.2 K ohms	F2	1 - 3
Yellow - Black	4 ~ 7 VDC	1 ~ 1.4 Mega ohms	F2	2 - 3

By-pass Flow Control:

Brown - White	2 ~ 6 VDC (Unit in operating mode)	15 ~ 35 ohms	G1	1 - 5
Orange - White			G1	2 - 5
Yellow - White			G1	3 - 5
Red-White - Ground			G1	4 - 5

(IG) Ignition System:

Grey - Grey	90 ~ 110 VAC	N / A	C1	1 - 2

(FM) Combustion Fan Motor:

Red - Black	6 ~ 45 VDC	N / A	E1	1 - 2
White - Black	5 ~ 10 VDC	9.2 ~ 9.4 K ohms	E1	2 - 4
Yellow - Black	11 ~ 13 VDC	3.5 ~ 3.9 K ohms	E1	2 - 3

Set your meter to the hertz scale. Reading across the white and black wires at terminals 2 and 4 you should read between 60 and 420 hertz.

Thermal Fuse / Overheat Switch:

Red - White	11 ~ 13 VDC	Below 1 ohms	F6 H1	F6 - H12

Flame Rod:
Place one lead of your meter to the flame rod and the other to earth or ground. With the unit running you should read between 5 ~ 150 VAC. Set your meter to the µ amp scale, series your meter in line with the flame rod. You should read 1µ or greater for proper flame circuit. In the event of low flame circuit remove the flame rod and check for carbon and/or damage.

Heat Exchanger and Outgoing Water Temperature Thermistors:
Check all thermistors by inserting meter leads into each end of the thermistor plug. Set your meter to the 20K scale and read resistance. You should be able to apply heat to the thermistor bulb and see the resistance decrease. Then apply some ice to the thermistor and the resistance should increase. See below for examples of temperatures and resistance reading at those temperatures.

Example: 59°F = 11.4 ~ 14KΩ 140°F = 2.2 ~ 2.7KΩ
86°F = 6.4 ~ 7.8KΩ 221°F = 0.6 ~ 0.8KΩ
113°F = 3.6 ~ 4.5KΩ

Outgoing Water Thermistor:

White - White	N / A	See example above	F4	3 - 4

Heat Exchanger Temperature Thermistor:

Pink - White	N / A	See example above	F3	3 - 11

Surge Protector:

Black - White	108 ~ 132 VAC	N / A	D2	1 - 3
Black - White	108 ~ 132 VAC	N / A	D1	1 - 3

With the power off you can check the continuity through the surge protector. Place one meter lead on the top pin #1 of the surge protector and pin #3 on the bottom of the surge protector. Then check across top pin #3 and bottom pin #1, If you read continuity across these two points the surge protector is good. If you do not get continuity, replace the surge protector.

Remote Controls:

Terminals B1	10 ~ 13 VDC	1.5 ~ 3.0 K ohms	B	1 - 3

Frost Protection:
This unit has six frost protection heaters mounted at different points inside the unit, to protect the water heater from freeze ups. There are two heaters located on the outlet hot water line next to the thermistor.
Using a voltage meter set on the 200 ohm scale, you should have a resistance reading. The heater located on the heat exchanger piping should have a resistance reading of 139 ~ 161 ohms and the one located in the water flow sensor valve has a resistance reading of 335 ~ 385 ohms. The one located in the outlet valve has a resistance reading of 335 ~ 385. Voltage throughout this circuit should be 120 VAC.

Amp Fuses:
This unit has an inline (3) amp glass fuse. Remove the fuse and check continuity through it. If you have Continuity through the fuse, it is good. If you can not read continuity, the fuse is blown and must be replaced.

Dip Switches Settings

Adjust switches 2 and 3 in the bank of 8 depending on your altitude according to the table below.

The original PC boards on the water heaters do not have the bank of 6 dip switches. Only spare PC boards have this bank.

R98LSi
R98LSi-ASME

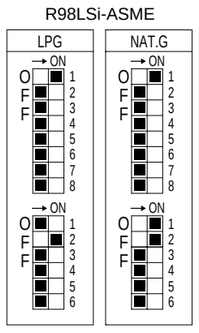

WARNING

DO NOT adjust the other dip switches unless specifically instructed to do so. Incorrect Dip Switch Settings can cause the Rinnai water heater to operate in an unsafe condition and may damage the water heater and void the warranty.

SW No.	NOTES								
2	High Altitude	Off	Level 0 0-2000ft (0-610m)	Off	Level 1 2001-5200ft (610-1585m)	On	Level 2 5201-7800ft (1585-2377m)	On	Level 3 7801-10200ft (2377-3109m)
3		Off		On		Off		On	

Error Codes

02 No burner operation during freeze protection mode
- Service Call

03 Power interruption during Bath fill (Water will not flow when power returns)
- Turn off all hot water taps. Press ON/OFF twice.

10 Air Supply or Exhaust Blockage
- Ensure Rinnai approved venting materials are being used.
- Check that nothing is blocking the flue inlet or exhaust.
- Check all vent components for proper connections.
- Ensure vent length is within limits.
- Ensure condensation collar was installed correctly.
- Verify dip switches are set properly.
- Check fan for blockage.

11 No Ignition
- Check that the gas is turned on at the water heater, gas meter, or cylinder.
- Ensure gas type and pressure is correct.
- Ensure gas line, meter, and/or regulator is sized properly.
- Bleed all air from gas lines.
- Verify dip switches are set properly.
- Ensure appliance is properly grounded.
- Disconnect EZConnect or MSA controls to isolate the problem.
- Ensure igniter is operational.
- Check igniter wiring harness for damage.
- Check gas solenoid valves for open or short circuits.
- Remove burner cover and ensure all burners are properly seated.
- Remove burner plate and inspect burner surface for condensation or debris.

12 Flame Failure
- Check that the gas is turned on at the water heater and gas meter. Check for obstructions in the flue outlet.
- Ensure gas line, meter, and/or regulator is sized properly.
- Ensure gas type and pressure is correct.
- Bleed all air from gas lines.
- Ensure proper Rinnai venting material was installed.
- Ensure condensation collar was installed properly.
- Ensure vent length is within limits.
- Verify dip switches are set properly.
- Ensure appliance is properly grounded.
- Disconnect keypad.
- Disconnect EZConnect or MSA controls to isolate the problem.
- Check power supply for loose connections.
- Check power supply for proper voltage and voltage drops.
- Ensure flame rod wire is connected.
- Check flame rod for carbon build-up.
- Disconnect and re-connect all wiring harnesses on unit and PC board.
- Check all components for electrical short.
- Check gas solenoid valves for open or short circuits.
- Remove burner plate and inspect burner surface for condensation or debris.

14 Thermal Fuse
- Check gas type of unit and ensure it matches gas type being used.
- Check for restrictions in air flow around unit and vent terminal.
- Check for low water flow in a circulating system causing short-cycling.
- Ensure dip switches are set to the proper position.
- Check for foreign materials in combustion chamber and/or exhaust piping.
- Check heat exchanger for cracks and/or separations.
- Check heat exchanger surface for hot spots which indicate blockage due to scale build up. Refer to instructions in manual for flushing heat exchanger.
- Measure resistance of safety circuit.
- Ensure high fire and low fire manifold pressure is correct.
- Check for improper conversion of product.

16 Over Temperature Warning
- Check for restrictions in air flow around unit and vent terminal.
- Check for low water flow in a circulating system causing short-cycling.
- Check for foreign materials in combustion chamber and/or exhaust piping.
- Check for clogged heat exchanger.

32 Outgoing Water Temperature Sensor Fault
- Check sensor wiring for damage.
- Measure resistance of sensor.
- Clean sensor of scale build up.
- Replace sensor.

33 Heat Exchanger Outgoing Temperature Sensor Fault
- Check sensor wiring for damage.
- Measure resistance of sensor.
- Clean sensor of scale build up.
- Replace sensor.

34 Combustion Air Temperature Sensor Fault
- Check for restrictions in air flow around unit and vent terminal.
- Check sensor wiring for damage.
- Measure resistance of sensor.
- Clean sensor of scale build up.
- Ensure fan blade is tight on motor shaft and is in good condition.
- Replace sensor.

52 Modulating Solenoid Valve Signal Abnormal
- Check modulating gas solenoid valve wiring harness for loose or damage terminals.
- Measure resistance of valve coil.

61 Combustion Fan Failure
- Ensure fan will turn freely.
- Check wiring harness to motor for damaged and/or loose connections.
- Measure resistance of motor winding.

65 Water Flow Servo Faulty (does not stop flow properly)
If blank screen is present on remote control then the flow control has shorted out. Unplug flow control. If remote lights up and unit starts operating then replace flow control assembly.

71 SV0, SV1, SV2, and SV3 Solenoid Valve Circuit Fault
- Check wiring harness to all solenoids for damage and/or loose connections.
- Measure resistance of each solenoid valve coil.

72 Flame Sensing Device Fault
- Ensure flame rod is touching flame when unit fires.
- Check all wiring to flame rod for damage.
- Remove flame rod and check for carbon build-up; clean with sand paper.
- Check inside burner chamber for any foreign material blocking flame at flame rod.
- Measure micro amp output of sensor circuit with flame present.
- Replace flame rod.

LC Scale Build-up in Heat Exchanger (when checking maintenance code history "00" is substituted for "LC")
- Flush heat exchanger. Refer to instructions in manual.
- Replace heat exchanger.

No Code (Nothing happens when water flow is activated.)
- Clean inlet water supply filter.
- On new installations ensure hot and cold water lines are not reversed.
- Check for bleed over. Isolate unit from building by turning off hot water line to building. Isolate the circulating system if present. Open your pressure relief valve; if unit fires, there is bleed over in your plumbing.
- Ensure you have at least the minimum flow rate required to fire unit.
- Ensure turbine spins freely.
- Measure the resistance of the water flow control sensor.
- Remote control does not light up but you have 12 VDC at the terminals for controls.

Wiring Diagram

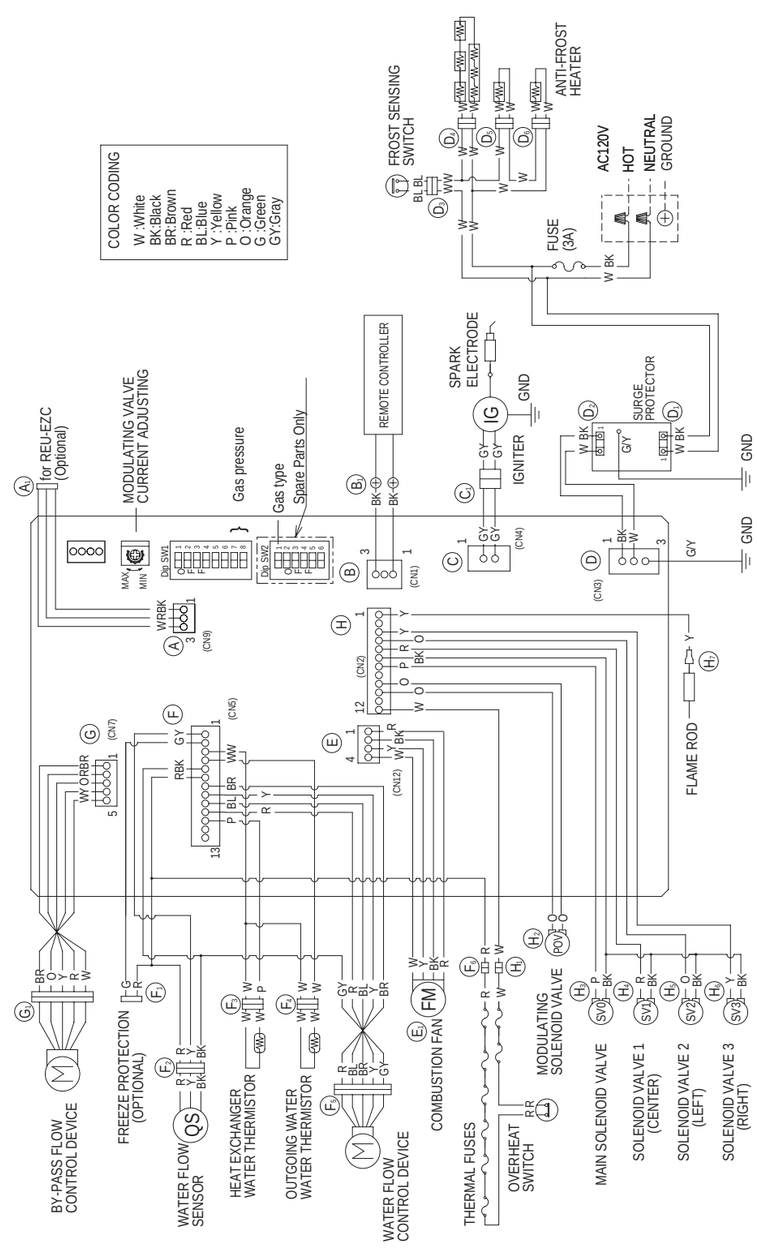

070 00012 35254 1

R98LSi(VA3237FFU)
R98LSi-ASME

U273-1363(00)

EXPLODED VIEW - CABINET

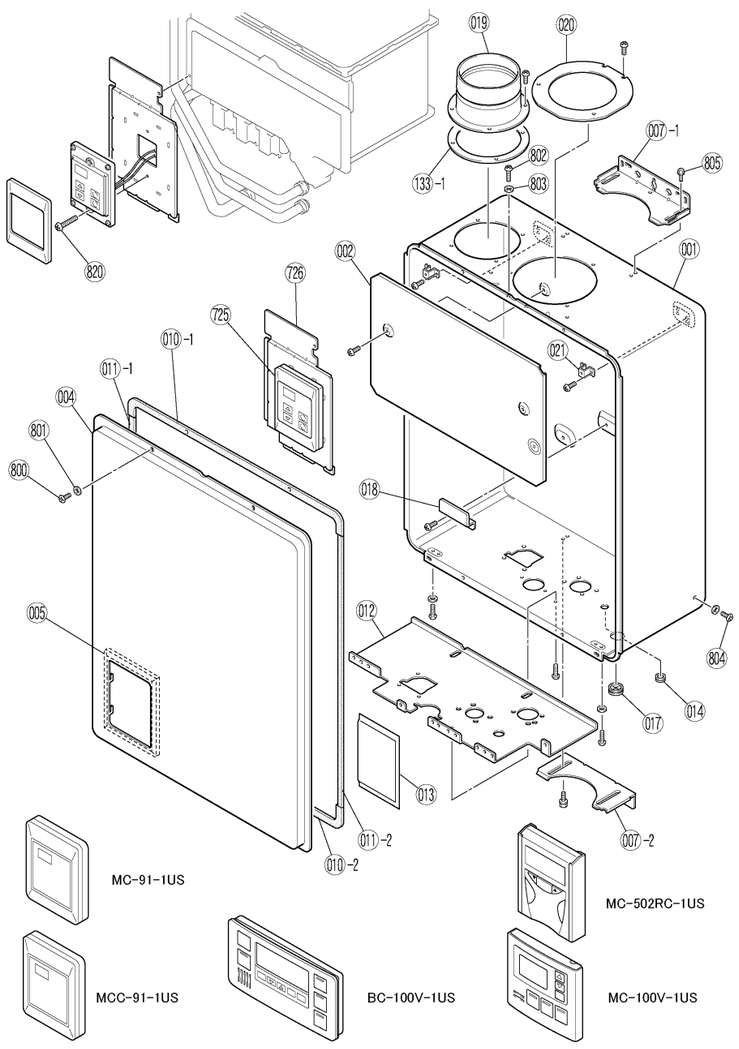

EXPLODED VIEW - INTERNALS

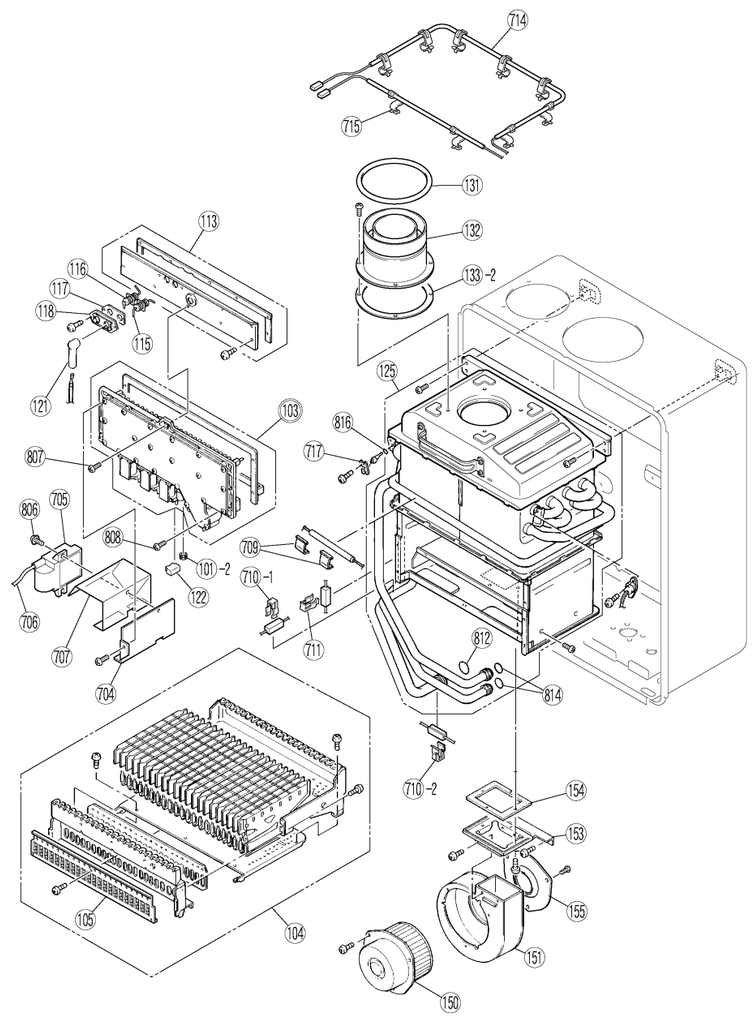

EXPLODED VIEW - INTERNALS

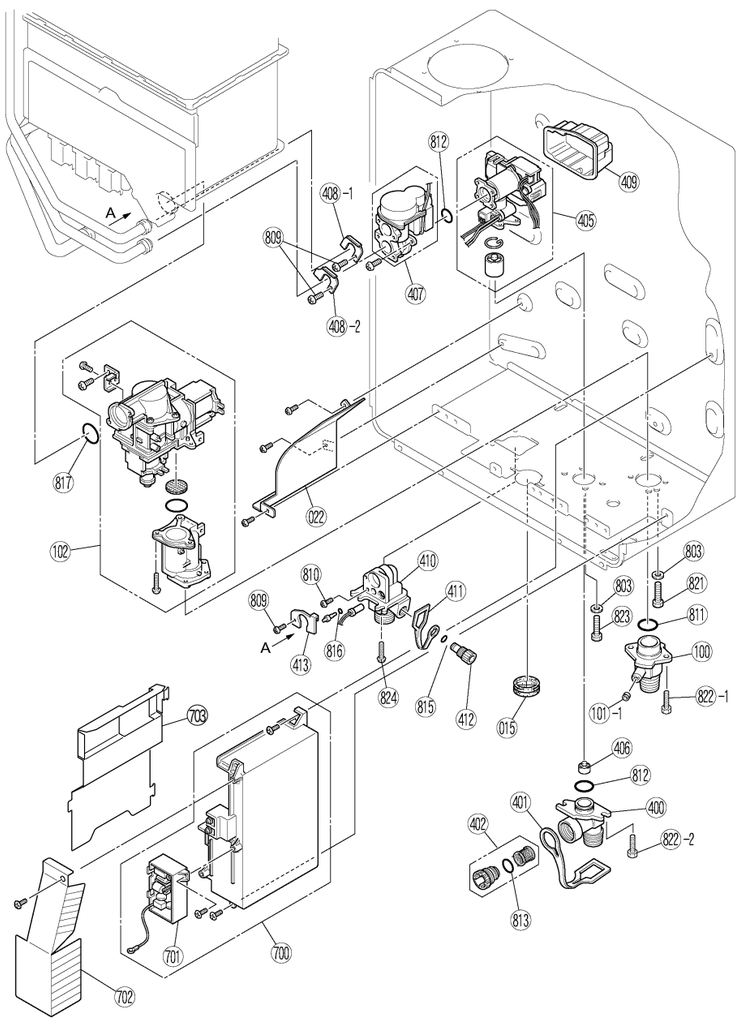

EXPLODED VIEW - ELECTRICAL

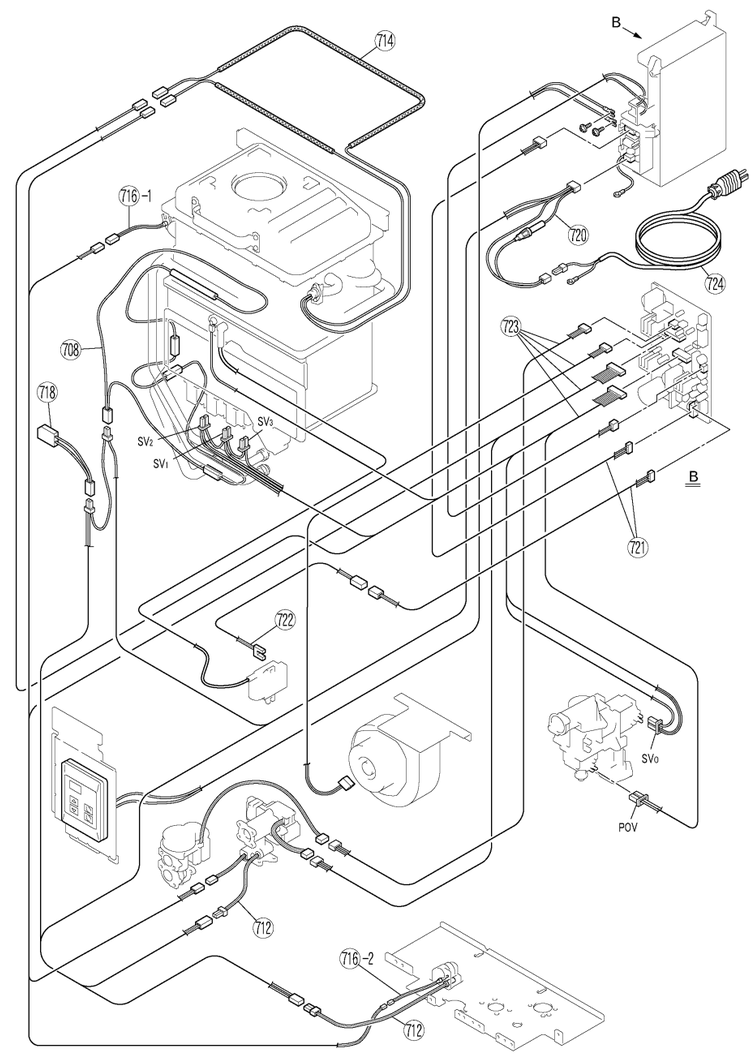

PARTS LIST

Number	Description	Parts Number	Quantity R98LSi	Quantity R98LSi-ASME
001	Main Body	109000061	1	1
002	Heat Protection Plate	H73-065	1	1
004	Front Panel Assembly	109000062	1	1
005	Remote Controller Packing	U273-123	1	1
007	Wall Fitting Bracket	109000064	2	2
010	Front Panel Packing-Top	BU195-167	2	2
011	Front Panel Packing-Side	109000065	2	2
012	Connection Reinforcement Panel	U273-115	1	1
013	Bag for Installation Manual	CP-80736	1	1
014	Seal Packing	AU105-113	1	1
015	Rubber Bushing	U245-125	1	1
017	Rubber Bushing	CF79-41020-A	1	1
018	Reinforcement Plate	U273-113	1	1
019	Air Intake Vent	BH67-320-2	1	1
020	Φ100 Seal Plate	U273-111	1	1
021	Duct Bracket	U273-103	2	2
022	Fan Rectifier	U273-130	1	1
100	Gas Connection(3/4"NPT)	CU195-1866	1	1
101	Screw	AU39-965	2	2
102	Gas Control Assembly	C36Q-7-AS	1	1
103	Manifold Assembly-A(LPG)	U273-200-A	1	1
103	Manifold Assembly-B(Nat.G)	U273-200-B	1	1
104	Burner Unit Assembly(LPG)	U273-240	1	1
104	Burner Unit Assembly(Nat.G)	106000024	1	1
105	Damper(LPG)	U273-235	1	1
105	Damper(Nat.G)	106000025	1	1
113	Combustion Chamber Front Plate	U211-266-2	1	1
114	Combustion Chamber Front Plate Packing	U211-267	1	1
115	Electrode	104000023	1	1
116	Flame Rod	U250-295	1	1
117	Electrode Packing	AH66-398	1	1
118	Electrode Holder	AH66-393	1	1
121	Electrode Sleeve	AU206-218	1	1
122	Solenoid Valve Cover	U211-1027	1	1
123	Upper Combustion Chamber Packing	U211-264	1	1
124	Lower Combustion Chamber Packing	U211-268	1	1

Number	Description	Parts Number	Quantity R98LSi	Quantity R98LSi-ASME
125	Heat Exchanger Complete Assembly	U273-270-C-S	1	-
125	Heat Exchanger Complete Assembly	U273-1392-C	-	1
131	Flue Outlet Vent Packing	BH29-486-C	1	1
132	Flue Outlet Vent Assembly	U273-260	1	1
133	Φ100 Packing	BH37-323	2	2
150	Blower Motor	U250-565	1	1
151	Fan Casing Assembly	U218-565	1	1
153	Fan Connecting Bracket	U273-335	1	1
154	Fan Connecting Packing	U211-552	1	1
155	Φ39 Bell Mouth	BH51-611	1	1
156	Fan Motor All Assembly	U273-330-B	1	1
400	Water Inlet (3/4"NPT)	H73-501-2	1	1
401	Plug Band	U250-631	1	1
402	Water Filter Assembly	H98-510-S	1	1
405	Water Flow Servo & Sensor Assembly	107000019	1	1
406	Rectifier	M8D1-15	1	1
407	Bypass-Servo Assembly	M6J-1-4	1	1
408	Stop Bracket	AH69-310	2	2
409	Water Flow Servo Cover	H112-508	1	1
410	Hot Water Outlet (3/4"NPT)	U273-320	1	1
411	Plug Band	AU103-413	1	1
412	Drain Valve	AU142-444	1	1
413	Stop Bracket	U211-322	1	1
700	PCB	105000053	1	1
701	Surge Protector	U250-1602-2	1	1
702	PCB Cover-Front	U273-355-US	1	1
703	PCB Cover-Side	105000015	1	1
704	Ignitor Bracket	U273-225	1	1
705	Ignitor	EI-144	1	1
706	High Tension Code	BH38-710-240	1	1
707	Ignitor Cover	U273-226	1	1
708	120V Anti Frost Heater Assembly	U273-382	1	1
709	Anti Frost Heater Clip	CF29-742	2	2
710	Anti Frost Heater Clip	105000027	2	2
711	Anti Frost Heater Clip	AU124-618	1	1
712	120V Valve Heater Assembly	U273-381	2	2
714	Thermal Fuse Harness	105000055	1	1

Number	Description	Parts Number	Quantity R98LSi	Quantity R98LSi-ASME
715	Thermal Fuse Clip	CP-80531	9	9
716	Thermistor	H111-650	2	2
717	Thermistor Clip	CP-90172	1	1
718	Frost Sensing Switch	H73-750	1	1
720	Fuse Harness	U273-370-2	1	1
721	Power Supply Harness	105000056	1	1
722	Ignitor Harness	U273-372	1	1
723	Sensor Harness	105000057	1	1
724	Power Code	CP-90580	1	1
725	Remote Controller (Silver)	103000019	1	1
726	Remote Controller Bracket	U273-121	1	1
800	Screw	CP-30580	4	4
801	Washer	AU33-184	4	4
802	Screw	ZBD0508UD	2	2
803	Washer	AU48-174	7	7
804	Screw	ZFDB0408UD	10	10
805	Screw	ZIHD0510UK	8	8
806	Screw	CP-80452	1	1
807	Screw	ZFDB0412SZ	5	5
808	Screw	CP-30627-412	2	2
809	Screw	CP-20883-408UK	3	3
810	Screw	U217-449	1	1
811	O-ring	M10B-1-24	1	1
812	O-ring	M10B-2-18	3	3
813	O-ring	M10B-2-16	1	1
814	O-ring	M10B-2-14	2	2
815	O-ring	M10B-2-7	1	1
816	O-ring	M10B-2-4	2	2
817	Packing	C36F8-1	1	1
820	Screw	ZAA3.520TK	2	2
821	Screw	ZQAA0512UK	1	1
822	Screw	ZQAA0514UK	4	4
823	Screw	ZQAA0508UK	2	2
824	Screw	ZBA0512UK	3	3
888	Operation/Instruction Manual	100000043	1	1
889	Tech Sheet	100000045	1	1
900	Front Panel Label(98)	100000047	1	1