Gas Fired Warm Air Furnace
Specification Sheet

DIMENSIONS
(Inches)

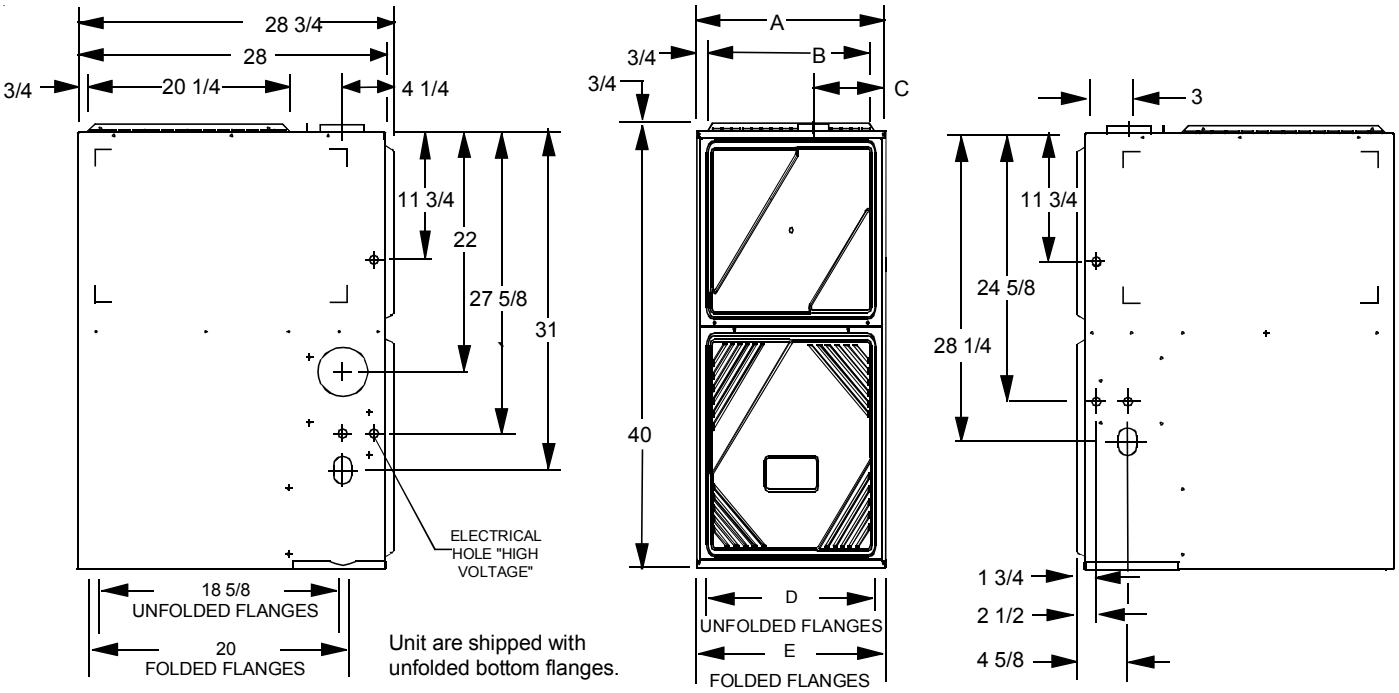

Models	A	B	C	D UNFOLDED	E FOLDED	MINIMUM VENT DIAMETER
070__30	16 1/2	15	5-3/8	13 1/2	15	4
090__50	20 1/2	19	7-3/8	17 1/2	19	4
115__40	24 1/2	23	9-3/8	21 1/2	23	5

All dimensions are in inches.

Part No.20371707
Printed in U.S.A.

March 2003

SPECIFICATIONS

Model Number	Input (Btu/hr)	Output (Btu/hr)	Temp. Rise Range (°F)	Number of Burners	Minimum[1] Circuit Ampacity (Amps)	Maximum[2] Overcurrent Protection (Amps)	Circulator Blower			Tons AC at 0.5" ESP	Pressure Switch Settings (inches w.c.)	Ship. Wt. (lbs)
							Size (D" x W")	HP	No. of Speeds			
070_30	69,000	55,200	45-75	3	6.4	15.0	10 X 7	1/3	4	1.5 - 3.0	-0.62	151
090_50	92,000	73,600	45-75	4	11.2	15.0	10 X 9	3/4	4	3.0 - 5.0	-0.62	178
115_40	115,000	92,000	45-75	5	10.4	15.0	10 X 10	1/2	4	2.5 - 4.0	-0.62	190

FILTERS ARE NOT INCLUDED WITH FURNACE AND MUST BE SUPPLIED BY THE INSTALLER.

[1] Minimum Circuit Ampacity = (1.25 x Circulator Blower Amps) + ID Blower Amps.

[2] Maximum Overcurrent Protection refers to maximum recommended fuse or circuit breaker size.

WARNING

To avoid death, personal injury or property damage due to fire, do not exceed maximum recommended fuse or circuit breaker size.

MINIMUM CLEARANCES

WARNING

To avoid death, personal injury or property damage due to fire, clearances to combustible surfaces listed as below must be observed.

Service Accessibility and Unit Connections

- 36 inches front clearance is required for servicing or cleaning.
- Unit connections (electrical, flue, and drain) may necessitate greater clearances than the minimum clearances listed below.

NOTE: In all cases, accessibility clearance must take precedence over clearances from the enclosure where accessibility clearances are greater.

MINIMUM CLEARANCES TO COMBUSTIBLE MATERIALS (INCHES)							
POSITION[1]	**LEFT**	**FRONT**	**RIGHT**	**REAR**	**TOP**	**FLUE**	**FLOOR**
Counterflow	0	5[2]	0	0	0	6[2]	NC
Horizontal Left	12	Alcove	6	0	1	6[2]	C
Horizontal Right	6	Alcove	12	0	1	6[2]	C

[1]All positioning is determined as installed unit is viewed from the front.

[2]1 inch when Type B-1 vent is used.

C = If placed on combustible floor, floor MUST be wood ONLY.

NC = For installation on non-combustible floors only.

Counterflow installation on a combustible floor only when installed on special base ASB01.

BLOWER PERFORMANCE

MODEL (Heating Speed As Shipped)	Motor Speed	Tons AC at 0.5" ESP	EXTERNAL STATIC PRESSURE (inches w.c.)												
			0.1		0.2		0.3		0.4		0.5		**0.6**	**0.7**	**0.8**
			CFM	RISE	CFM	RISE	CFM	RISE	CFM	RISE	CFM	RISE	**CFM**	**CFM**	**CFM**
070__30 (MED-LO)	HIGH	3.0	1390	---	1361	---	1339	---	1301	---	1255	---	**1198**	**1129**	**1037**
	MED	2.5	1111	46	1102	46	1093	47	1066	48	1037	49	**1008**	**947**	**893**
	MED-LO	2.0	868	59	865	59	865	59	851	60	832	61	**806**	**767**	**691**
	LOW	1.5	669	---	655	---	646	---	631	---	601	---	**575**	**542**	**482**
090__50 (LOW)	HIGH	5.0	2156	---	2089	---	1995	---	1832	---	1751	---	**1653**	**1517**	**1385**
	MED	4.0	1805	---	1779	---	1724	---	1638	---	1548	---	**1469**	**1349**	**1238**
	MED-LO	3.5	1569	---	1549	---	1509	45	1446	47	1370	50	**1301**	**1202**	**1109**
	LOW	3.0	1312	52	1312	52	1277	53	1228	55	1189	57	**1123**	**1052**	**928**
115__40 (MED)	HIGH	4.0	1907	45	1850	46	1782	48	1720	50	1638	52	**1551**	**1448**	**1337**
	MED	3.5	1675	51	1638	52	1590	54	1541	55	1469	58	**1394**	**1314**	**1191**
	MED-LO	3.0	1352	63	1352	63	1330	64	1284	66	1253	68	**1196**	**1119**	**1016**
	LOW	2.5	1136	75	1128	---	1110	---	1073	---	1036	---	**976**	**913**	**810**

NOTES:

- All furnaces ship as high speed for cooling. Installer must adjust blower speed as needed.
- For most jobs, about 400 CFM per ton when cooling is desirable.
- This chart is for furnaces installed at 0 - 4000 feet. At higher altitudes, a properly derated unit will have the same temperature rise at a particular CFM, while the ESP at that CFM will be lower.
- The shaded area ( )indicates ranges in excess of maximum external static pressure allowable when heating. For satisfactory operation, external static pressure should not exceed 0.5" W.C. The data for 0.6" W.C. to 0.8" W.C. is shown for air conditioning purposes only.
- The dashed (-----) areas indicate a temperature rise not recommended for this model.
- The installation must be adjusted to obtain a temperature rise within the range listed on the furnace nameplate.

FURNACE SUSPENSION

If necessary to suspend the furnace from rafters or joists, use 3/8 inch threaded rod with angle iron as shown below.

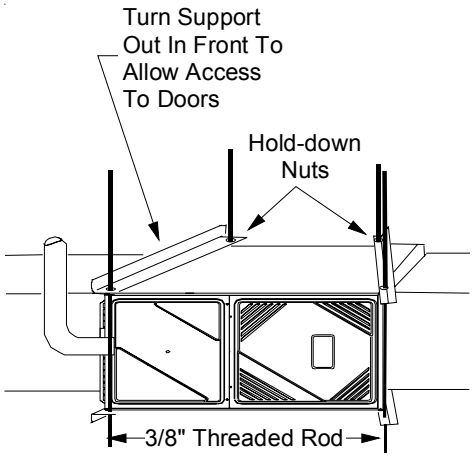

FILTERS

NOTE: Filters are required with this furnace and must be provided by the installer. The filters used must comply with UL900 or CAN/ULCS111 standards. Installing this furnace without filters will void the unit warranty.

This furnace has provisions for the installation of return air filters at the counterflow top return. The furnace will accommodate the following filter sizes depending on cabinet size:

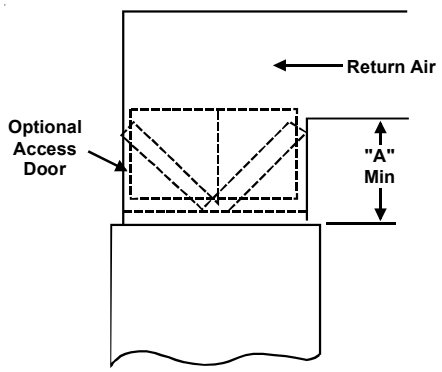

COUNTERFLOW TOP RETURN				
Nom. Filter Size (in.)	Qty.	Approx. Flow Area (in^2)	Cabinet Width (in.)	Dim. "A" (in.)
14 x 25 x 1	2	600	16-1/2 20-1/2 24-1/2	14.2 13.0 11.3
16 x 25 x 1	2	800	16-1/2 20-1/2 24-1/2	19.7 18.8 17.7
20 x 25 x 1	2	1000	16-1/2 20-1/2 24-1/2	25.0 24.3 23.4

Refer to Minimum Filter Area tables to determine filter area requirement. **NOTE:** Filters can also be installed elsewhere in the duct system such as a central return.

PERMANENT MINIMUM FILTER AREA (in^2) *[Based on a 600 ft/min filter face velocity]*								
MODELS		COOLING AIRFLOW REQUIREMENT (CFM)						
		600	800	1000	1200	1400	1600	2000
Input_Airflow	070__30	210*	210*	240	288	---	---	---
	090__50	---	---	---	288	336*	384	480
	140__50	---	---	---	419*	419*	419*	480

DISPOSABLE MINIMUM FILTER AREA (in^2) *[Based on a 300 ft/min filter face velocity]*								
MODELS		COOLING AIRFLOW REQUIREMENT (CFM)						
		600	800	1000	1200	1400	1600	2000
Input_Airflow	070__30	419*	419*	480	576	---	---	---
	090__50	---	---	---	576	672	768	960
	115__40	---	---	699*	699*	699*	768	---

*Minimum filter area dictated by heating airflow requirement.

FLAME SENSOR

Flame sensor output is 1 to 4 microamps at 115 volts.

NOTES:

1. All furnaces have a redundant gas valve and blower door interlock switch.
2. All furnaces are manufactured for use on 115 VAC, 60 Hz, single phase electrical supply.
3. **IMPORTANT:** While the data is presented as a guide, it is very important to electrically connect the unit and properly size fuses and wires in accordance with the National Electrical Code and/or all existing local codes.
4. Performance figures are based on Department of Energy information and requirements under continuous operating conditions. Performance will vary with weather conditions and use.

SUBBASE (ASC01A)

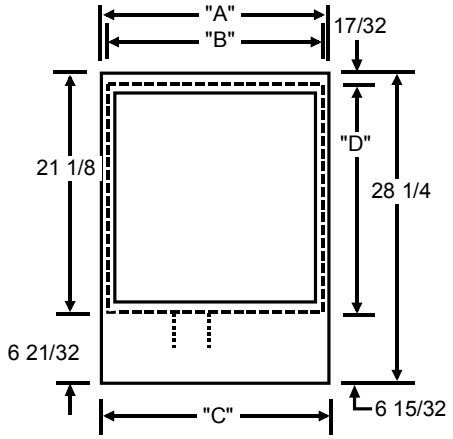

Furnace Model	Dim. "A" Subbase Width	Dim. "B" Plenum Chamber	Dim. "C" Floor Opening	Dim. "D" Floor Opening
70	17	15	16-1/8	21-1/4
90	21	19	20-1/8	
115	25	23	24-1/8	

Subbase is adjustable to fit all 3 cabinet sizes.
All dimensions are in inches.
Floor Opening = C x 21 1/4 Plenum Size = B x 21 1/8
(Exterior Dimensions)
Detailed installation instructions are shipped with the subbase.

⚠ WARNING

To prevent death, personal injury or property damage due to electrical shock, disconnect electrical power to this furnace before servicing or performing maintenance.

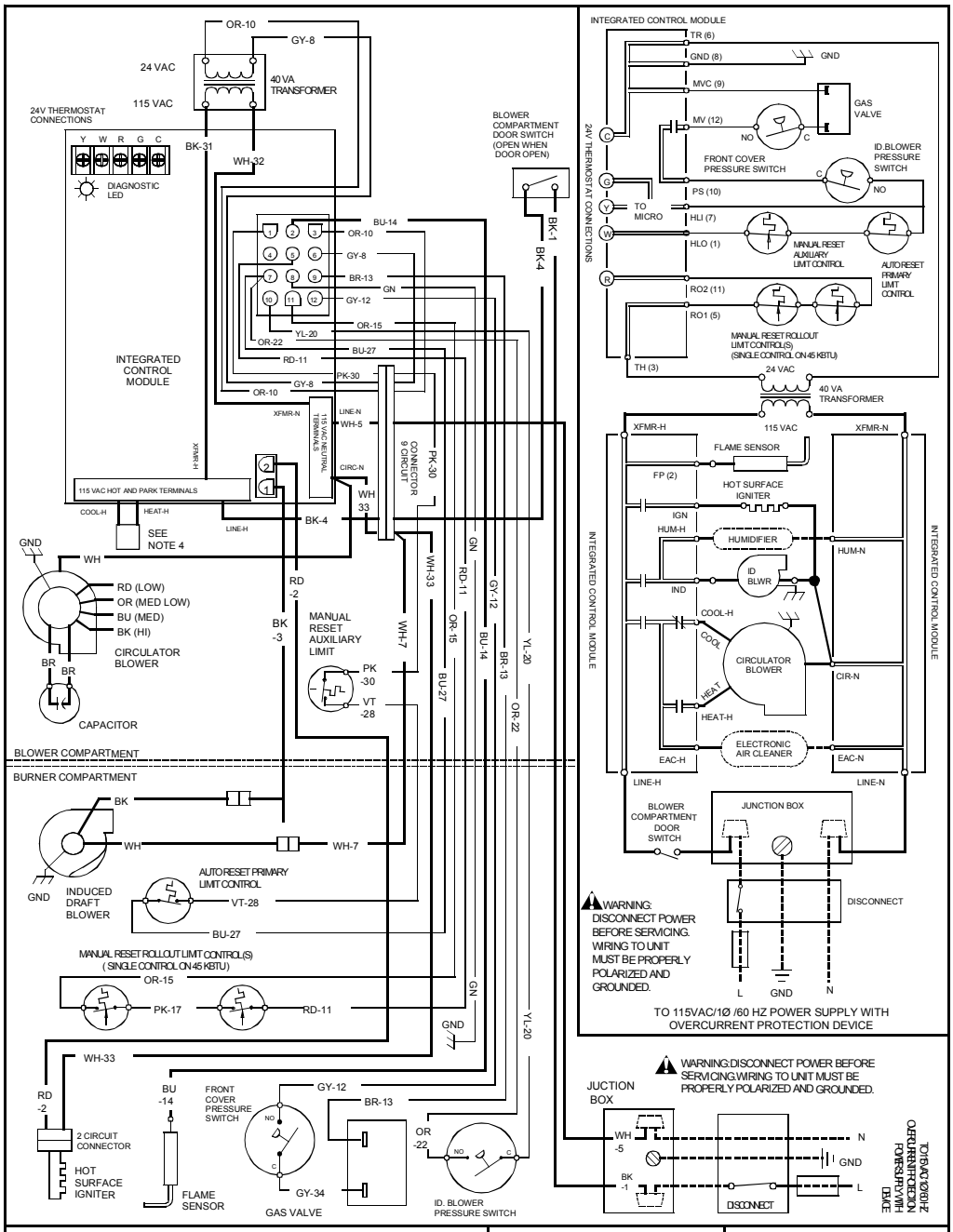

- 0 STEADY ON = REPLACE CONTROL
- 1 1 FLASH = SYSTEM LOCKOUT (RETRIES/RECYCLES EXCEEDED)
- 2 2 FLASHES = PRESSURE SWITCH STUCK CLOSED
- 3 3 FLASHES = PRESSURE SWITCH STUCK OPEN
- 4 4 FLASHES = OPEN PRIMARY OR AUXILIARY LIMIT
- 5 5 FLASHES = OPEN ROLLOUT LIMIT
- 6 6 FLASHES = 115V AC POWER REVERSED OR POOR UNIT GROUND
- 7 7 FLASHES = LOW FLAME SENSE SIGNAL
- C CONTINUOUS FLASHES = UNANTICIPATED FLAME PRESENT

LOW VOLTAGE (24V)
LOW VOLTAGE FIELD
HI VOLTAGE (115V)
HI VOLTAGE FIELD
JUNCTION
TERMINAL
INTERNAL TO INTEGRATED CONTROL
PLUG CONNECTION

EQUIPMENT GND
FIELD GND
FIELD SPLICE
SWITCH (TEMP.)
IGNITER
SWITCH (PRESS.)
OVERCURRENT PROT. DEVICE

COLOR CODES:

YL YELLOW	PK PINK
OR ORANGE	BR BROWN
VT VIOLET	WH WHITE
GN GREEN	BU BLUE
BK BLACK	GY GRAY
	RD RED

20479301 REV.00

NOTES:
1. SET HEAT ANTICIPATOR ON ROOM THERMOSTAT AT 0.7 AMPS.
2. MANUFACTURER'S SPECIFIED REPLACEMENT PARTS MUST BE USED WHEN SERVICING.
3. IF ANY OF THE ORIGINAL WIRE AS SUPPLIED WITH THE FURNACE MUST BE REPLACED, IT MUST BE REPLACED WITH WIRING MATERIAL HAVING A TEMPERATURE RATING OF AT LEAST 105°C. USE COPPER CONDUCTORS ONLY.
4. IF HEATING AND COOLING BLOWER SPEEDS ARE NOT THE SAME DISCARD JUMPER BEFORE CONNECTING BLOWER LEADS. UNUSED BLOWER LEADS MUST BE PLACED ON "PARK" TERMINALS OF INTEGRATED CONTROL OR TAPED.
5. UNIT MUST BE PERMANENTLY GROUNDED AND CONFORM TO N.E.C. AND LOCAL CODES.