Heating & Air Conditioning

Amana®

LASTS AND LASTS AND LASTS.™

Specification Sheet


Cooling Capacity:
18,000 - 60,000 BTUH

LIMITED WARRANTY

- 5-Year—Parts

Asure℠
EXTENDED SERVICE PLAN

# MBE/MBR

## Modular Blowers

*The Amana® brand MBE/MBR modular blower sections are tailor-made for exceptional energy efficiency. These blowers are designed with quality components and assembled with excellent craftsmanship. When matched with our cased coils for upflow, downflow and horizontal applications, these 2-piece blower coils increase both installation and application flexibility.*

**Quality Design Features.** All models include foil-face insulation. The insulation is glued in place and covers the entire blower case; therefore, it reduces operating sound and opportunities for cabinet condensation.

**Cabinet Durability and Installation Flexibility.** The cabinet is constructed from galvanized steel that is formed and painted to produce one of the best cabinets available on the market today. The two sides and back are made from a single piece of steel to increase rigidity and to make installations easier. Bottom flanges are formed inwardly for additional strength and to provide a good mounting surface for a cased-coil section to form a two-piece blower coil. Connector plates and screws are shipped with the MBE/MBR.

**Easy to Service Controls.** MBE and MBR blowers use the HKR electric heat kits that are used in single-piece air handlers. The MBR control board includes a fan delay in the cooling mode and is isolated from the air stream.

**Variable-speed Motors**. MBE models feature the GE ECM motor. This variable-speed motor features quiet ramp-up and ramp-down operation, while improving the overall air distribution in the HVAC system. With input from a field-installed humidity control, the MBE can respond to excess humidity conditions in the cooling mode. ECM motors use less electricity than the constant-speed PSC motors.

## Nomenclature

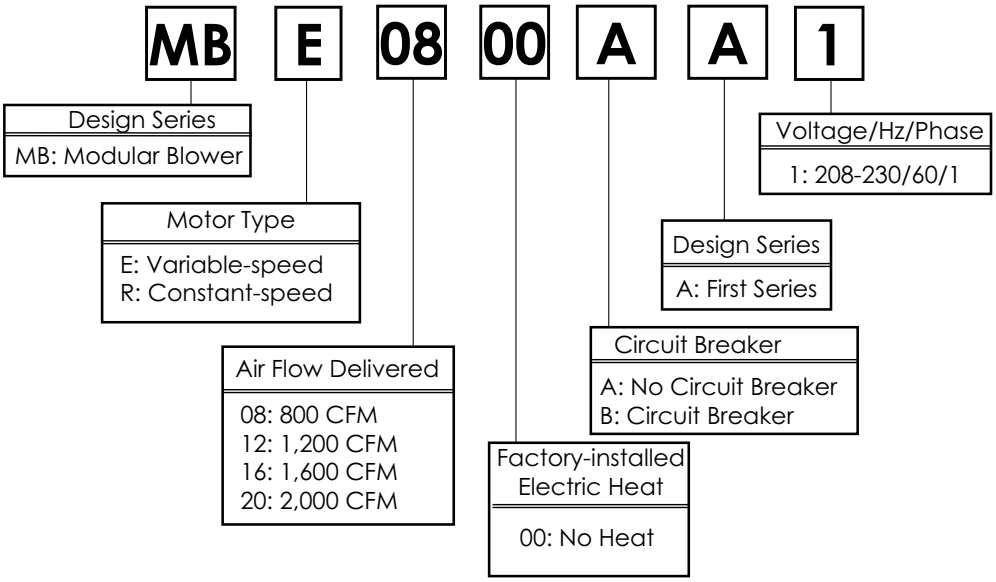


MBR/MBE blower cabinets are designed to be used as a two-piece blower and coil combination. MBR/MBE blower sections can be attached to cased evaporator coil. This two piece arrangement allows for a variety of mix-matching possibilities providing greater flexibility.

The MBE blower uses a variable-speed motor that maintains a constant air flow despite duct static. It is approved for applications with cooling coils of up to 0.8 inches W.C. external static pressure and includes a feature that allows air flow to be changed by +10%/-15%.

The MBR/MBE blower cabinets are intended to be used with a cased evaporator coil and a condensing unit or heat pump. The blower section of the cabinet can also be used as an electric furnace. The electric heating elements are field-installed. The MBR/MBE uses HKR electric heat kits.

The MBR/MBE blower cabinets can be positioned for upflow, downflow, horizontal right or horizontal left operation. All units are constructed with foil-face insulation.

The CAPX/CHPX coils rated with the MBR/MBE are equipped with a check thermostatic expansion valve assembly for refrigerant control. The CACF/CAPF/CHPF coils rated with the MBR/MBE are equipped with a check flowrater. The coils are designed for upflow, downflow or horizontal applications, using three-speed, direct-drive motors on the MBR models, and BPM (Brushless Permanent Magnet) or ECM motor on the MBE models.

## Specifications

| Model | Blower Wheel (D x W) | Blower Motor (HP) | Minimum Circuit Ampacity[1] | Maximum Overcurrent Protection[1] | Shipping Weight (pounds) |
|---|---|---|---|---|---|
| MBR0800 | 9" x 6" | 1/4 | 1.9 | 15 | 72 |
| MBR1200 | 9" x 8" | 1/3 | 3.0 | 15 | 72 |
| MBE1200 | 10" x 8" | 1/2 | 3.2 | 15 | 72 |
| MBR1600 | 10" x 8" | 1/3 | 3.8 | 15 | 82 |
| MBE1600 | 10" x 8" | 3/4 | 5.7 | 15 | 82 |
| MBR2000 | 10" x 10" | 1/2 | 4.9 | 15 | 94 |
| MBE2000 | 11" x 10" | 3/4 | 4.4 | 15 | 94 |

1) Minimum Circuit Ampacity and Maximum Overcurrent Protection for blower without supplemental heat installed. Refer to unit nameplate for these specifications with approved accessory heaters installed.

# Dimensions

## Side and Front View Dimensions

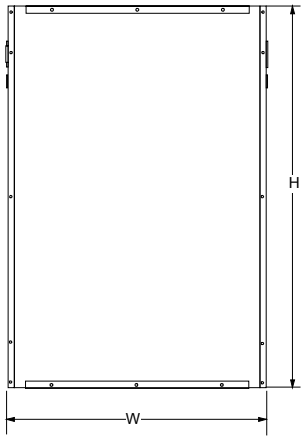


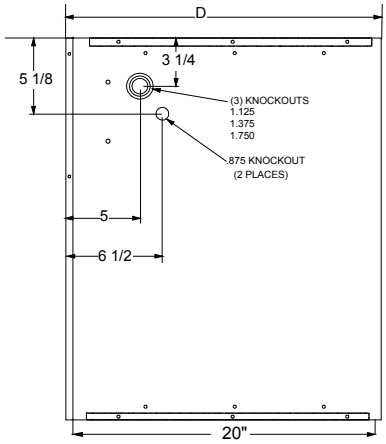


| | MBR0800<br>MBR1200<br>MBE1200 | MBR1600<br>MBE1600 | MBR2000<br>MBE2000 |
|---|---|---|---|
| **W** | 17½" | 21" | 24½" |
| **H** | 26" | 30" | 30" |
| **D** | 21" | 21" | 21" |

## Top View Dimensions

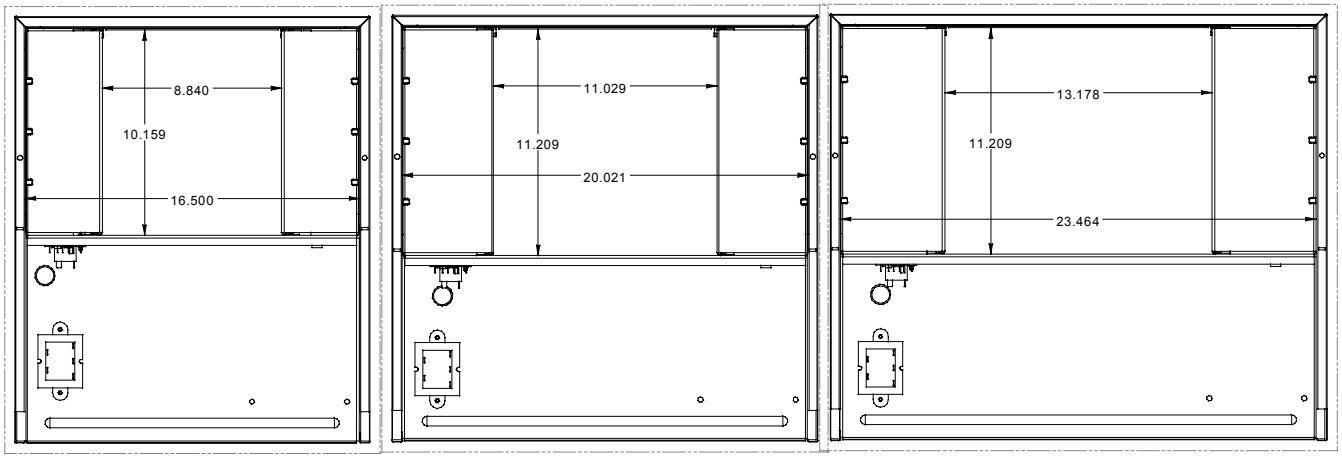


SMALL MEDIUM LARGE

# Electric Heater Kit Applications

| Blower | Electric Heat Kit | | | | | | | | | |
|---|---|---|---|---|---|---|---|---|---|---|
| | HKR-03A | HKR-05(C)A | HKR-06A | HKR-08(C)A | HKR-10(C)A | HKR-15(C)A | HKR-20(C)A | HKR-21(C)A | HKR3-15A | HKR3-20A |
| MBR0800AA-1 | X | X | X | X | X | | | | | |
| MBR1200AA-1 | X | X | X | X | X | X | X | X | X | X |
| MBR1600AA-1 | X | X | X | X | X | X | X | X | X | X |
| MBR2000AA-1 | X | X | X | X | X | X | X | X | X | X |
| MBE1200AA-1 | | | | X | X | X | | | | |
| MBE1600AA-1 | | | | | X | X | | | | |
| MBE2000AA-1 | | | | | X | X | X | | | |

X = Allowable combinations
Shaded areas indicate restricted combinations

## MBR Blower Performance Specifications

| Speed | Static | MBR0800**-* SCFM | MBR1200**-* SCFM | MBR1600**-* SCFM | MBR2000**-* SCFM |
|---|---|---|---|---|---|
| High | 0.1 | 1,240 | 1,500 | 1,800 | 2,160 |
| | 0.2 | 1,170 | 1,460 | 1,740 | 2,080 |
| | 0.3 | 1,120 | 1,360 | 1,680 | 1,990 |
| | 0.4 | 1,060 | 1,280 | 1,610 | 1,890 |
| | 0.5 | 980 | 1,200 | 1,520 | 1,790 |
| | 0.6 | 900 | 1,110 | 1,430 | 1,690 |
| Medium | 0.1 | 900 | 1,380 | 1,540 | 1,730 |
| | 0.2 | 850 | 1,320 | 1,490 | 1,670 |
| | 0.3 | 790 | 1,270 | 1,450 | 1,590 |
| | 0.4 | 740 | 1,200 | 1,400 | 1,520 |
| | 0.5 | 680 | 1,140 | 1,350 | 1,420 |
| | 0.6 | 605 | 1,040 | 1,280 | 1,320 |
| Low | 0.1 | 650 | 1,170 | 1,130 | 1,520 |
| | 0.2 | 590 | 1,130 | 1,100 | 1,450 |
| | 0.3 | 540 | 1,080 | 1,070 | 1,360 |
| | 0.4 | 500 | 1,020 | 1,030 | 1,290 |
| | 0.5 | 430 | 950 | 990 | 1,200 |
| | 0.6 | 330 | 830 | 930 | 1,090 |

External static is for blower @ 230 Volts, it does not include Coil, Air Filter or Electric heaters.

## MBE Blower Performance Specifications

### Dipswitch Functions

| Dipswitch Number | Function |
|---|---|
| 1 | Electric Heat |
| 2 | |
| 3 | N/A |
| 4 | Indoor Thermostat |
| 5 | Cooling & Heat Pump CFM |
| 6 | |
| 7 | CFM Trim Adjust |
| 8 | |

### Cooling/Heat Pump Operation

| Model | Switch 5 | Switch 6 | CFM |
|---|---|---|---|
| MBE1200 | OFF | OFF | 1,200 |
| | ON | OFF | 1,000 |
| | OFF | ON | 800 |
| | ON | ON | 600 |
| MBE1600 | OFF | OFF | 1,600 |
| | ON | OFF | 1,400 |
| | OFF | ON | 1,200 |
| | ON | ON | 1,000 |
| MBE2000 | OFF | OFF | 2,000 |
| | ON | OFF | 1,800 |
| | OFF | ON | 1,600 |
| | ON | ON | 1,200 |

### Electric Heat Operation

| Model | Switch 1 | Switch 2 | CFM |
|---|---|---|---|
| MBE1200 | OFF | OFF | 1,200 |
| | ON | OFF | 1,000 |
| | OFF | ON | 800 |
| | ON | ON | 600 |
| MBE1600 | OFF | OFF | 1,600 |
| | ON | OFF | 1,400 |
| | OFF | ON | 1,200 |
| | ON | ON | 1,000 |
| MBE2000 | OFF | OFF | 2,000 |
| | ON | OFF | 1,800 |
| | OFF | ON | 1,600 |
| | ON | ON | 1,200 |

**Thermostat "Fan Only" Mode**
During Fan Only operations, the CFM output is 30% of the cooling setting.

**CFM Trim Adjust**
Minor adjustments can be made through the dip switch combination of 7-8.

| CFM | Switch 7 | Switch 8 |
|---|---|---|
| +10% | ON | OFF |
| -15% | OFF | ON |



Date: 8/04
Supercedes 7/04
Form: PDB-MBEMBR