HEAT CONTROLLER, INC.

HYDRONIC AIR HANDLERS — AHG SERIES FOR R-410A

Matched to 13 & 14 SEER R-410A Air Conditioning Condensers

Blower Time Delay (30-45 Seconds)
Warms the coil before the blower is energized to prevent cold air release

Line Voltage Terminal Block and Low Voltage Terminal Strip
Allows fast, simple thermostat connection

High Temp Nylon Drain Pans
Resists corrosion and bacterial growth

Slide-Out Blower Assembly
Makes service and maintenance fast

Factory Installed Air Filter
Available in standard sizes

Freeze Protection for Both Heating and Cooling
Protects the entire system year 'round

3/4" Water Connections
Assures correct water supply lines

Multi-Position—Vertical or Horizontal left or right

R-410A

1 1/2 to 5 TONS

CABINET FEATURES

- Entire cabinet is pre-painted, galvanized steel for maximum corrosion protection
- Interlocking access panels and gasketed screws eliminate air leakage

HYDRONIC COIL

- Built-in coil design
- Aluminum fin/copper tube construction
- Manual air vent and drain valves
- 3/4" sweat water connections

EVAPORATOR COIL

- Aluminum fin/copper tube, TXV for R-410A included
- Primary and secondary drains
- Five year limited warranty on coil

ELECTRIC SUPPLY

- 115V, 60 Hz system, 24 volt control circuit
- Low voltage terminal strip
- High voltage supply at top of cabinet
- Post-purge timer for cooling

AHG Series Hydronic Air Handlers—1 1/2 to 5 Tons

The AHG family of highly efficient Hydronic Air Handlers offers the most-wanted features in the industry:

- Low voltage terminal strip and 24 volt transformer included for easy wiring
- Blower time delay of 30 to 45 seconds preheats the hydronic coil
- Freeze protection both heat and cool modes provides the ultimate in protection for the entire system
- Slide-out blower assembly makes service and maintenance fast and easy
- Multi-position design can be installed vertically or horizontally left or right
- ARI matched with Heat Controller's line of 13 and 14 SEER condensing units for R-410A

PERFORMANCE

MODEL	TONS CLG.	REFRIGERANT CONN. SIZE VAPOR In.OD	LIQUID	NOM. HEATING @ 180°F (BTUH)	NOMINAL AIRFLOW (CFM)	FILTER SIZE	SHIPPING WT. (lbs)
AHG24-0A	1.5	3/4	3/8	41,200	600	16” x 20” x 1”	140
AHG24-0A	2.0	3/4	3/8	41,200	800	16” x 20” x 1”	140
AHG30-0A	2.5	3/4	3/8	62,500	1,000	16” x 20” x 1”	140
AHG36-0A	3.0	3/4	3/8	82,000	1,330	20” x 25” x 1”	199
AHG48-0A	3.5	7/8	3/8	107,000	1,450	20” x 25” x 1”	199
AHG48-0A	4.0	7/8	3/8	107,000	1,740	20” x 25” x 1”	199
AHG60-0A	5.0	7/8	3/8	125,000	2,000	20” x 25” x 1”	199

BLOWER

MODEL	MOTOR@115V 60HZ HP	FLA	BLOWER WHEEL	MOTOR SPEEDS	SCFM(1) @ ESP (in. w.c.) 0.1	0.2	0.3	0.4	0.5
AHG24-0A	1/4	3.2	10 x 6	H	850	800	760	720	680
				M	825	775	715	690	670
				L	780	715	655	630	—
AHG30-0A	1/3	6.2	10 x 7	H	1010	980	930	865	830
				M	975	935	895	845	800
				L	950	900	860	810	—
AHG36-0A	1/3	6.2	10 x 8	H	1360	1310	1270	1230	1190
				M	1340	1250	1170	1090	1060
				L	1280	1170	1040	970	—
AHG48-0A	3/4	9.5	11 x 9	H	1860	1740	1640	1530	1480
				M	1780	1620	1510	1390	1280
				L	1680	1500	1320	1250	—
AHG60-0A	3/4	9.7	11 x 11	H	1950	1900	1845	1770	1720
				M	1820	1750	1620	1470	1440
				L	1750	1640	1390	1270	—

(1) Based on dry coil and clean filter installed.
Use .96 as approximate correction factor for wet coil.

DIMENSIONS (inches)

MODEL	AHG24, -30	AHG36, -48, -60
A	17 1/2	21 1/2
B	21	25
C	15	19 1/4
D	17 1/2	22 1/4
E	16	19 5/8
F	12 5/8	17 1/4
G	39 3/4	49 3/4

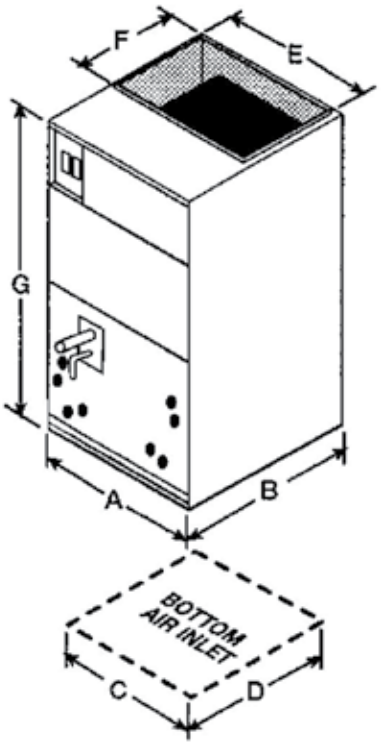

Certification applies only when the complete system is listed with ARI.

c UL us LISTED

EXTENDED RANGE DATA (based on entering water temp and 65° F entering air temp)

MODEL	HEATING NOM. SCFM*	130°F	140°F	150°F	160°F	170°F	180°F	GPM	P.D. FT. H_2O
AHG24-0A	800H	23,000	26,000	30,300	33,900	37,600	41,200	4	1.9
AHG30-0A	980H	34,000	39,000	43,000	48,500	56,000	62,500	4	2.3
AHG36-0A	1170L	45,000	50,000	60,000	67,000	74,000	82,000	4	1.4
AHG48-0A	1740H	59,000	67,000	78,000	88,000	97,000	107,000	4	0.8
AHG60-0A	1900H	69,000	80,000	91,000	102,500	113,500	125,000	7	2.5

** H=High, L=Low*

EXTENDED RANGE DATA (based on water flow)

MODEL	180° F ENTERING WATER							
	2.0 GPM	3.0 GPM	4.0 GPM	5.0 GPM	6.0 GPM	7.0 GPM	8.0 GPM	9.0 GPM
AHG24-0A	43,250	48,250	52,000	54,200	55,800	N/A	N/A	N/A
AHG30-0A	50,400	58,200	63,000	66,200	68,500	N/A	N/A	N/A
AHG36-0A	65,000	74,500	82,000	87,000	90,700	N/A	N/A	N/A
AHG48-0A	74,300	93,000	107,000	115,100	122,000	N/A	N/A	N/A
AHG60-0A	75,900	95,700	109,500	119,600	123,300	125,000	128,600	133,000

Heat Controller has been in the business of keeping homes comfortable in all seasons since 1933. We offer a full line of energy efficient, quality constructed products including furnaces, heat pumps, air conditioners, dehumidifiers, ductless mini-split systems, and systems designed specially for geothermal installations. Our commercial/industrial line provides comfort solutions with capacities up to 25 tons. Each of the products in our line is backed by outstanding warranty coverage and after-sales support.

Your contractor or local dealer can help you select the equipment that is best suited to your needs and lifestyle.

...And for the best in year 'round comfort, AHG air handlers are ideally matched with our 13 and 14 SEER condensing units for R-410A, available in a wide range of sizes and featuring the industry's best limited warranty— 12 years on the compressor and 12 years on parts.

(With registration by original owner within 90 days of purchase and installed as part of an AHRI matched system; other limitations apply. See printed limited warranty for details.)

The AHG Series of high efficiency air handlers comes charged with R-410A, an environmentally friendly refrigerant. Refrigerants used in the past contained chlorine which, when released to the atmosphere, combined with oxygen molecules from the earth's vital ozone layer, destroying this barrier that protects us from the sun's harmful ultraviolet rays. Soon all CFC and HCFC refrigerants used around the world will be replaced by non-ozone depleting types such as the R-410A already in use in our equipment.

HEAT CONTROLLER, INC.

1900 Wellworth Ave., Jackson, Michigan 49203 • Ph. 517-787-2100 • Fax 517-787-9341

THE QUALITY LEADER IN AIR CONDITIONING

www.heatcontroller.com