V4043A,B,E,J; V4044A,B; V8043A,B,E,F,J; V8044A,B,E Motorized Valves

PRODUCT DATA

V4043, V4044, V8043, V8044
Replacement Powerhead

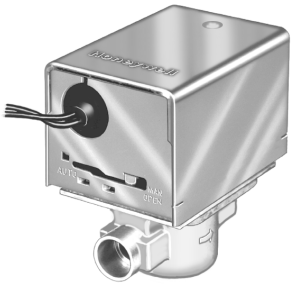

V4043, V8043

V8043 Inverted Flare

V4044, V8044

APPLICATION

These valves consist of an actuator motor and valve assembly for controlling the flow of hot or cold water, or steam.

IMPORTANT

These valves are not for use in systems containing dissolved oxygen.

FEATURES

- **The V4043 and V8043 provide 2-position, straight-through control of water.**
- **The V4044 and V8044 provide 2-position diverting control of water.**
- **Compact construction for easy installation.**
- **Manual opener for valve operation on power failure. Valve returns to automatic position when power is restored.**
- **Choice of sweat or flare fitting brass end connections for standard copper tubing.**
- **Motor can be replaced by removing one screw, without disturbing the valve body or draining the system.**
- **Complete powerhead may be removed or replaced without breaking the line connections or draining the system.**
- **All models can be installed without disassembling the valve.**
- **Fits under the cover of most baseboards.**
- **Available with integral auxiliary end switch (V4044B; V8043E,F; V8044E) to permit sequencing of auxiliary equipment.**
- **V4043E and V8043J provide straight-through control of steam.**

Contents

Application 1
Features 1
Specifications 2
Ordering Information 2
Installation 10
Operation and Checkout 20

® U.S. Registered Trademark
Copyright © 1996 Honeywell Inc. • All Rights Reserved

60-2133-9

SPECIFICATIONS

TRADELINE® Models

TRADELINE® models are selected and packaged to provide ease of stocking, ease of handling, and maximum replacement value. TRADELINE® model specifications are the same as those of standard models except as noted below.

TRADELINE® Models Available:
V8043A,E, and V8043E,F (see Table 1).

Capacity Rating:
3.5 C_V (3.0 kV) nominal. (See Electrical Ratings table in Standard Models section and Table 1.)

Additional Feature:
End switch enclosure included.

Standard Models

Models:
V4043: line voltage, straight-through valves.
V4044: line voltage, 2-position diverting valves.
V8043: low voltage, straight-through valves.
V8044: low voltage, 2-position diverting valves.
See Table 1.

Electrical Ratings
(See Table 1 for Voltage of Specific Models):

Voltage	Amperes	Voltage	Amperes
24	0.320[a]	220	0.042
100	0.087	240	0.040
120	0.080	277	0.037
208	0.044	—	—

[a]Maximum five V8043 Zone Valves per 40 VA transformer.

Changeover Aquastat® Control:
120V, 3.0A with 10.0A inrush.

End Switch:
120V, 4.4A running with 26.4A inrush (60 Hz). Pilot duty 50 VA at 24V.

Timing:
V4043 and V8043: Open or close in 15 seconds maximum.
V4044 and V8044: Divert flow in 30 seconds maximum.

Dimensions:
See Fig. 1.

Manual Opener:
Manual opener (on all except the straight-through, normally open valves) allows opening the valve in case of power failure. Valve returns to automatic position when power is restored.

ORDERING INFORMATION

For ordering information when purchasing replacement and modernization products from your TRADELINE® wholesaler or your distributor, refer to the TRADELINE® Catalog or price sheets for complete ordering number, or specify:

1. Order number.
2. Voltage and frequency.
3. Size and type of end connections.
4. C_V (kV) rating.
5. Lead length if different from standard.
6. Replacement parts, if needed.

If you have additional questions, need further information, or want to comment on our products or services, please write or phone:

1. Your local Honeywell Home and Building Control sales office (check white pages of phone directory).
2. Home and Building Control Customer Relations
   Honeywell, 1885 Douglas Drive North
   Minneapolis, Minnesota 55422-4386

In Canada—Honeywell Limited/Honeywell Limitee, 35 Dynamic Drive, Scarborough, Ontario M1V 4Z9. International Sales and Service Offices in all principal cities of the world. Manufacturing in Australia, Canada, Finland, France, Germany, Japan, Mexico, Netherlands, Spain, Taiwan, United Kingdom, U.S.A.

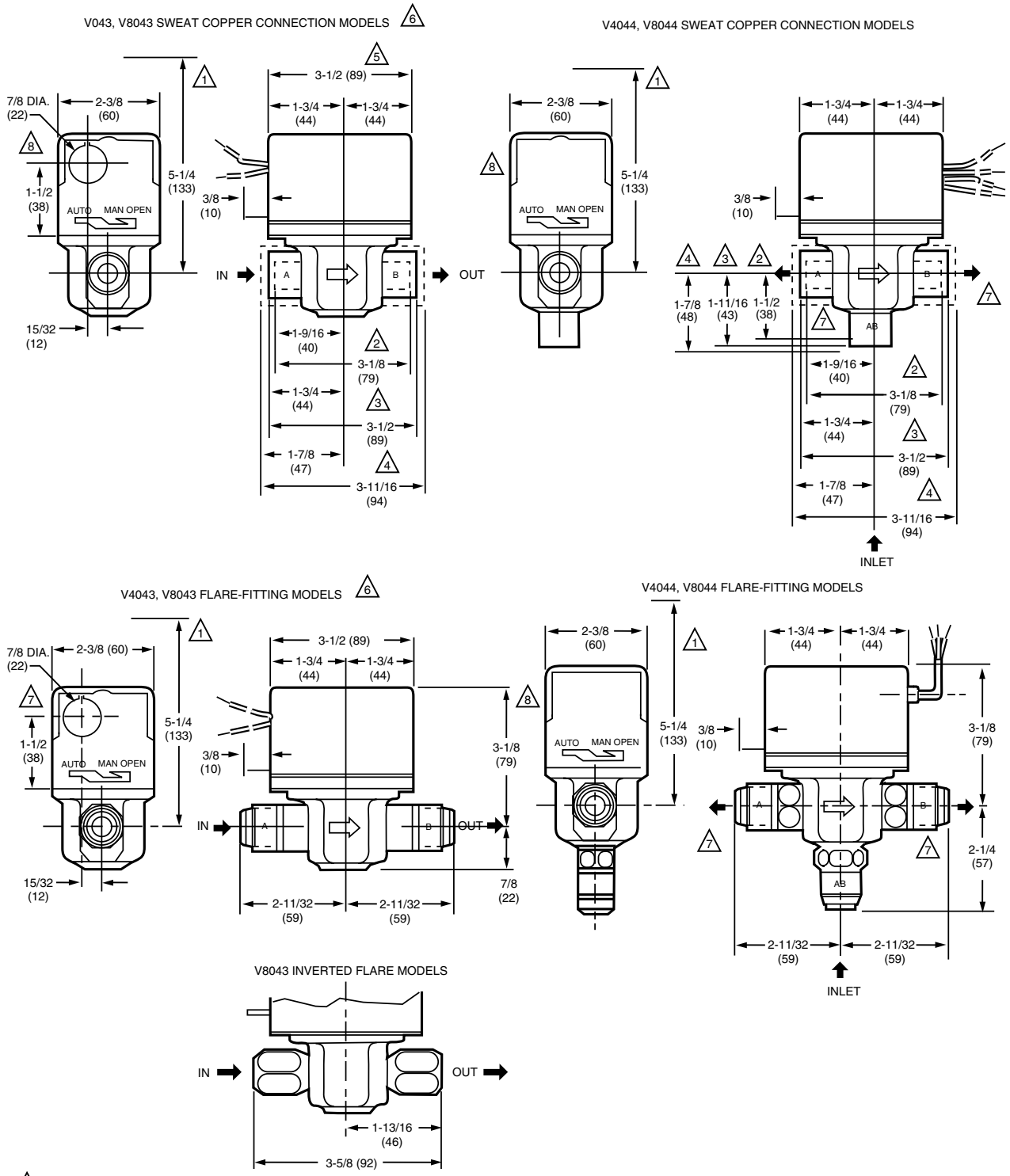

1 HEIGHT NEEDED TO REMOVE COVER.

2 DIMENSIONS FOR 1/2 IN. COPPER TUBING.

3 DIMENSIONS FOR 3/4 IN COPPER TUBING.

4 DIMENSIONS FOR 1 IN. COPPER TUBING.

5 4-7/8 IN. (124) MAX ON V8034F WITH TERMINAL BOARD ENCLOSURE.

6 V4034B AND V8043B VALVES THAT ARE NORMALLY OPEN IN THE DE-ENERGIZED POSITION HAVE NO MANUAL LEVER. THE VALVES ALSO HAVE A REVERSED POWERHEAD WHERE THE LEADWIRES EXIT THE POWERHEAD ABOVE THE B (OUTLET) PORT RATHER THAN ABOVE THE A (INLET) PORT.

7 REFER TO MOUNTING INSTRUCTIONS.

M10175

8 OPENING FOR 1/2 IN. CONDUIT ON MANUAL LEVER SIDE FOR V4043, V8043; OPENING ON OPPOSITE SIDE FOR V4044, V8044.

Fig. 1. Mounting dimensions in in. (mm) of V4043/44, V8043/44 Motorized Valves.

Table 1. Powerhead and Valve Body Specifications

Model	Control Circuit	Flow Capacity Rating		Wire Hookup	Pipe Connections		Valve Body	De-energized Position
		Cv	kV		Type	Size (in.)		
V4043A	120V, 60 Hz	1.0	.86	18 in. (457 mm) leadwires, 1/2 in. conduit opening.	Sweat	1/2	Straight-through	Normally Closed
	120V, 60 Hz	3.5	3.0		Sweat or Flare	1/2		
	120V, 60 Hz	8.0	7.0		Sweat	3/4		
	120V, 60 Hz	8.0	7.0		Sweat	1		
	120V, 60 Hz	3.5	3.0		NPT	1/2		
	120V, 60 Hz	3.5	3.0		NPT	3/4		
	120V, 60 Hz	10.0	8.6		NPT	1		
	208V, 60 Hz	3.5	3.0		Flare	1/2		
	220V, 50 Hz	3.5	3.0		Flare	1/2		
	240V, 50 or 60 Hz	3.5	3.0		Sweat or Flare	1/2		
V4043B	120V, 60 Hz	1.0	.86	18 in. (457 mm) leadwires, 1/2 in. conduit opening.	Sweat	1/2	Straight-through	Normally Open
	120V, 60 Hz	3.5	3.0		Sweat or Flare	1/2		
	240V, 60 Hz	3.5	3.0		Sweat	1/2		
V4043E (steam only)	120V, 60 Hz[a]	Cv not applicable (15 psi [103 kPA] low pressure steam rating).		18 in. (457 mm) leadwires, 1/2 in. conduit opening.	Sweat[d]	1/2	Straight-through	Normally Closed
	208V, 60 Hz				Sweat	1/2		
	240V, 60 Hz				Sweat	1/2		
V4044A	120V, 60 Hz	4.0	3.4	18 in. (457 mm) leadwires, 1/2 in. conduit opening.	Sweat or Flare[c]	1/2	2-position diverting	Port A Normally Closed
	120V, 60 Hz	7.0	6.0		Sweat[c]	3/4		
	120V, 60 Hz	4.0	3.4		Sweat[e]	1/2		
	208V, 60 Hz	4.0	3.4		Sweat	1/2		
	220V, 50 Hz	4.0	3.4		Sweat or Flare	1/2		
	220V, 50 Hz	7.0	6.0		Sweat	3/4		
	240V, 50 Hz	4.0	3.4		Sweat or Flare	1/2		
	240V, 60 Hz	4.0	3.4		Sweat or Flare	1/2		
	277V, 60 Hz	4.0	3.4	24 in. (610 mm) leadwires, 1/2 in. conduit opening.	Sweat	1/2		
V4044B[b,c] (bottom inlet)	120V, 60 Hz	4.0	3.4	18 in. (457 mm) leadwires, 1/2 in. conduit opening.	Sweat or Flare	1/2	2-position diverting	Port A Normally Closed
	120V, 60 Hz	7.0	6.0		Sweat	3/4		
	220V, 50 Hz	4.0	3.4		Flare	1/2		

Model	Control Circuit	Flow Capacity Rating		Wire Hookup	Pipe Connections		Valve Body	De-energized Position
		Cv	kV		Type	Size (in.)		
V8043A	24V, 60 Hz	3.5	3.0	18 in. (457 mm) leadwires, 1/2 in. conduit opening.	Sweat or Flare	1/2	Straight-through	Normally Closed
	24V, 60 Hz	3.5	3.0		NPT	1/2		
	24V, 60 Hz	3.5	3.0		Sweat	3/4		
	24V, 60 Hz	8.0	7.0	36 in. (914 mm) leadwires, 1/2 in. conduit opening.	Sweat	3/4		
	24V, 60 Hz	3.5	3.0	18 in. (457 mm) leadwires, 1/2 in. conduit opening.	Sweat	1		
V8043B	24V, 60 Hz	3.5	3.0	18 in. (457 mm) leadwires, 1/2 in. conduit opening.	Sweat	1/2	Straight-through	Normally Open
	24V, 60 Hz	3.5	3.0		Sweat	3/4		
	24V, 60 Hz	3.5	3.0		NPT	3/4		
V8043E	24V, 60 Hz	3.5	3.0	18 in. (457 mm) leadwires and end switch, 1/2 in. conduit opening.	Sweat	1/2	Straight-through	Normally Closed
	24V, 60 Hz	3.5	3.0		Sweat	3/4		
	24V, 60 Hz	3.5	3.0		Sweat	1		
	24V, 60 Hz	8.0	7.0		Sweat	3/4		
	24V, 60 Hz	8.0	7.0		Sweat	1		
	24V, 60 Hz	10.0	8.6		NPT	1		
	24V, 60 Hz	3.5	3.0		NPT	3/4		
V8043F	24V, 60 Hz	3.5	3.0	Terminal Board and end switch.	Sweat	1/2	Straight-through	Normally Closed
	24V, 60 Hz	3.5	3.0		Sweat	3/4		
	24V, 60 Hz	3.5	3.0		Sweat	1		
	24V, 60 Hz	8.0	7.0		Sweat	3/4		
	24V, 60 Hz	8.0	7.0		Sweat	1		
V8043J	24V, 60 Hz[d]	Cv not applicable. (15 psi [103 kPa] low pressure steam rating).		18 in. (457 mm) leadwires, 1/2 in. conduit opening.	[d]Sweat	1/2	Straight-through	Normally Open
	24V, 60 Hz				NPT	1/2		
	24V, 60 Hz				NPT	3/4		
V8044A	24V, 60 Hz	4.0	3.4	18 in. (457 mm) leadwires, 1/2 in. conduit opening.	Sweat or Flare[e]	1/2	2-position diverting	Port A Normally Closed
	24V, 60 Hz	7.0	6.0		Sweat	3/4		
	24V, 60 Hz	4.0	3.4	50 in. (1270 mm) stranded leadwires, 1/2 conduit opening.	Sweat	1/2		
	24V, 60 Hz	4.0	3.4	18 in. (457 mm) leadwires, 1/2 in. conduit opening.	NPT	1/2		
	24V, 60 Hz	4.0	3.4		NPT	3/4		

Model	Control Circuit	Flow Capacity Rating		Wire Hookup	Pipe Connections		Valve Body	De-energized Position
		Cv	kV		Type	Size (in.)		
V8044B	24V, 60 Hz[b]	4.0	3.4	18 in. (457 mm) leadwires, 1/2 in. conduit opening.	Sweat	1/2	2-position diverting	Port A Normally Closed
V8044E	24V, 60 Hz	4.0	3.4	18 in. (457 mm) leadwires and end switch, 1/2 in. conduit opening.	Sweat	1/2	2-position diverting	Port A Normally Closed
	24V, 60 Hz	7.0	6.0		Sweat	3/4		

[a] 30 in. (762 mm) leads also available.
[b] Includes integral changeover Aquastat® Control.
[c] 96 in. (2438 mm) leads also available.
[d] 30 in. (762 mm) leads also available.
[e] Valve available with reduced (2.5 C_V [2.1 kV]) rating on bypass port. Sweat fitting only.

Approvals:
Underwriters Laboratories Inc. Listed: V4043A,B,E; V4044A,B; V8043A,B,E,J; V8044A,B,E: File MH11826, Vol. 1, dated 2-22-88.

Replacement Parts:
Motor Part Numbers (use with V4043, V4044, V8043, V8044):
802360JA 24 Vac, 60 Hz, Class A, plated.
802360LA 120 Vac, 60 Hz, Class F, plated.
802360MA 208 Vac, 60 Hz, Class F, plated.
802360NA 220V 50 Hz, 240V 60 Hz, Class F, plated.
802360UA 24 Vac, 60 Hz, Class F, plated.

Powerhead (see Table 2):
Includes motor, housing and two mounting screws.

Conversion Kits:
Conversion kits for converting old style (series 1-5) valve bodies to accept 40003916 Powerhead (use with V4043, V4044, V8043, V8044). Includes metal plate with driveshaft and rubber ball, O-Ring and four screws.
Two-way water valve body: 40003918-006.
Three-way water valve body: 40003918-007.
Two-way steam valve body: 40003918-008.

O-Ring Part Numbers:
272742A—Includes replacement ball plug, large O-Ring and four screws.
272756A—Package of five large O-Rings.

Accessories:
803867A Conduit Cover: Includes 803858 Cover and 803859 Case (for V8043F).

Flow and Temperature Ratings:

Valve Family	Flow Capacity Rating		Maximum Closeoff Pressure		Max Fluid Temperature	Min Fluid Temperature	Max Ambient Temperature
	Cv	kV	psi	kPa			
V4043A,B,E,J	1.0	.86	50	345	240°F (116°C)	40°F (5°C)	125°F (50°C)
	3.5	3.0	20	138	240°F (116°C)	40°F (5°C)	125°F (50°C)
	10.0	8.6	6.5	45	240°F (116°C)	40°F (5°C)	125°F (50°C)
V8043A,B,E,F	3.5	3.0	20	138	200°F (93°C)	40°F (5°C)	125°F (50°C)
	8.0	7.0	8	55	200°F (93°C)	40°F (5°C)	125°F (50°C)
	10.0	8.6	6.5	45	200°F (93°C)	40°F (5°C)	125°F (50°C)
V4044A,B	4.0	3.4	20	138	240°F (116°C)	40°F (5°C)	125°F (50°C)
	7.0	6.0	10	69	240°F (116°C)	40°F (5°C)	125°F (50°C)
V8044A,B,E	4.0	3.4	20	138	200°F (93°C)	40°F (5°C)	125°F (50°C)
	7.0	6.0	10	69	200°F (93°C)	40°F (5°C)	125°F (50°C)
V4043E, V8043J (steam)	—	—	15[a]	103	240°F (116°C)	40°F (5°C)	125°F (50°C)

Static Pressure Rating of 125 psi (862 kPa) applies to all valves.
[a]15 psi low pressure steam.

Table 2. Replacement Powerheads.

Valve Model Number	Part Number	Electrical Connection on Which Side of Manual Lever	Voltage (Vac) and Frequency (Hz)	Current Draw (A)	Type of Electrical Connection	Motor
V4043A	40003916-022	Same	220/50, 240/60	0.04	18 in (457 mm) leads (conduit opening)	Class F; plated
	40003916-023	Same	240, 50	0.04		
	40003916-024	Same	120, 60	0.08		
V4043B	40003916-030	Same	240, 60	0.04		
	40003916-031	Same	120, 60	0.08		
	40003916-042	Same	208, 60	0.04		
V8043A	40003916-021	Same	24, 50/60	0.32		Class A
V8043B	40003916-027	Same	24, 50/60	0.32		
V8043E	40003916-026	Same	24, 50/60	0.32		
V8043F	40003916-048	Same	24, 50/60	0.32	Terminal Board	
V4044A	40003916-034	Opposite	240, 50	0.04	18 in. (457 mm) leads (conduit opening)	Class F; plated
	40003916-035	Opposite	220/50, 240/60	0.04		
	40003916-036	Opposite	120, 60	0.08	96 in. (2438 mm) leads (conduit opening)	
	40003916-047	Same	120, 60	0.08		
V4044B	40003916-039	Opposite	220/50, 240/60	0.04	18 in. (457 mm) leads (conduit opening)	
	40003916-040	Opposite	120, 60	0.08		
	40003916-045	Same	120, 60	0.08		
V8044A	40003916-032	Opposite	24, 50/60	0.32	18 in. (457 mm) leads (conduit opening)	Class A; plated
	40003916-046	Same	24, 50/60	0.32		
V8044B	40003916-037	Opposite	24, 50/60	0.32	18 in. (457 mm) leads (conduit opening)	
	40003916-044	Same	24, 50/60	0.32		

How to Find Maximum Valve Operating Temperature

The maximum operating temperature for motorized valves depends on the maximum ambient temperature at the valve location, and on the maximum fluid temperature. Using the graph in Fig. 2, find the maximum valve operating temperature as follows:

❶ Measure the ambient temperature at the valve and locate that temperature on the ambient temperature scale on the graph.

❷ Draw a line from the ambient temperature, parallel with the fluid temperature scale, to the maximum fluid temperature line.

❸ Draw a line from that point down to the fluid temperature scale to find the maximum operating temperature. (Note the example shown by the dashed line in Fig. 2.)

To find the maximum ambient temperature for a valve when the fluid temperature is known, reverse the procedure.

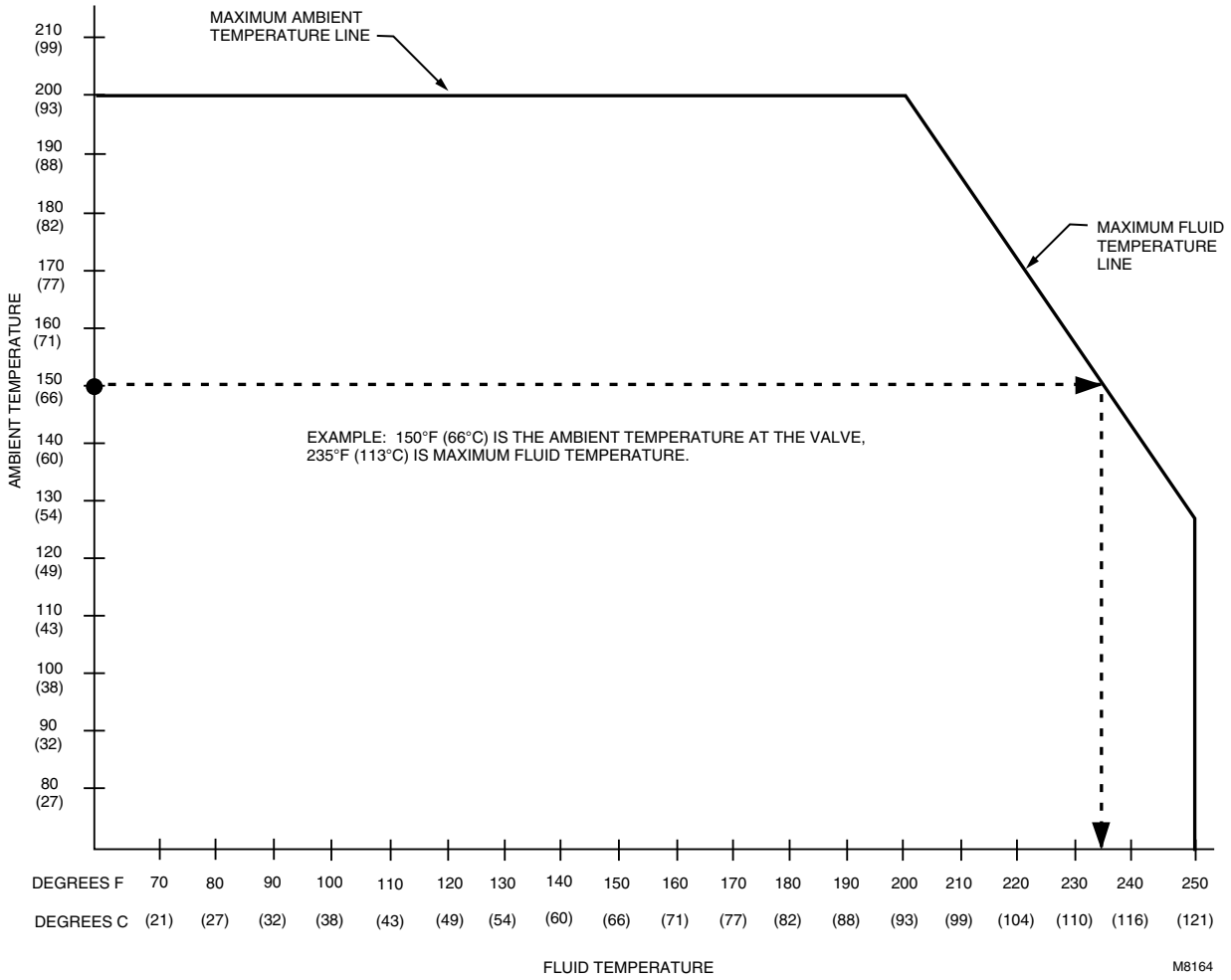

Fig. 2. Maximum temperature characteristics of valves with Class F motors.

How to Find Valve Pressure Drop

The pressure drop in psi (kPa), equivalent ft (m) of pipe, or feet of water (kPa) can be calculated from Fig. 3 through 8 as follows:

1. Calculate the flow rate to heat the zone.
2. Determine the C_V (kV) rating of the motorized valve.
3. Select the graph corresponding to the C_V (kV) rating (Fig. 3 through 8).
4. Determine the pressure drop across the valve using the following procedures for calculating pressure drop.

Pressure Drop in psi (kPa)

1. Locate the flow rate at the bottom of the graph.
2. Draw a line up from the flow rate to the intersection of the curve.
3. Draw a line from the intersection to the left edge of the graph to determine the pressure drop in psi (kPa).

Pressure Drop in Equivalent ft (m) of Pipe

NOTE: Both 1/2 and 3/4 in. pipe conversion scales are available for this determination.

1. Locate the flow rate at the bottom of the graph.
2. Draw a line vertically to the top of the graph. Determine the pressure drop for either the 1/2 or 3/4 in. pipe.

Pressure Drop in ft of Water (kPa)

1. Locate the flow rate at the bottom of the graph.
2. Draw a line up from the flow rate to the intersection of the curve.
3. Draw a line from the intersection to the right edge of the graph to determine pressure drop in ft of water (kPa).

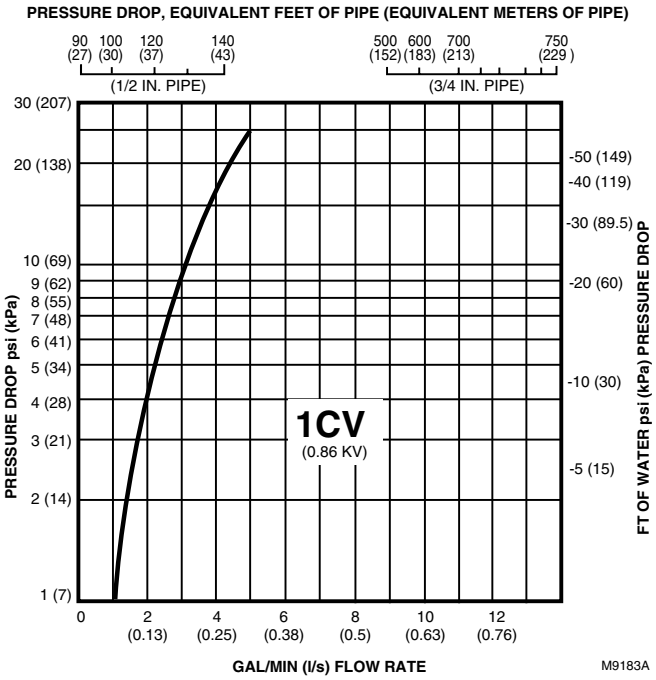

Fig. 3. Flow characteristics of 1 C_V (0.86 kV) flow.

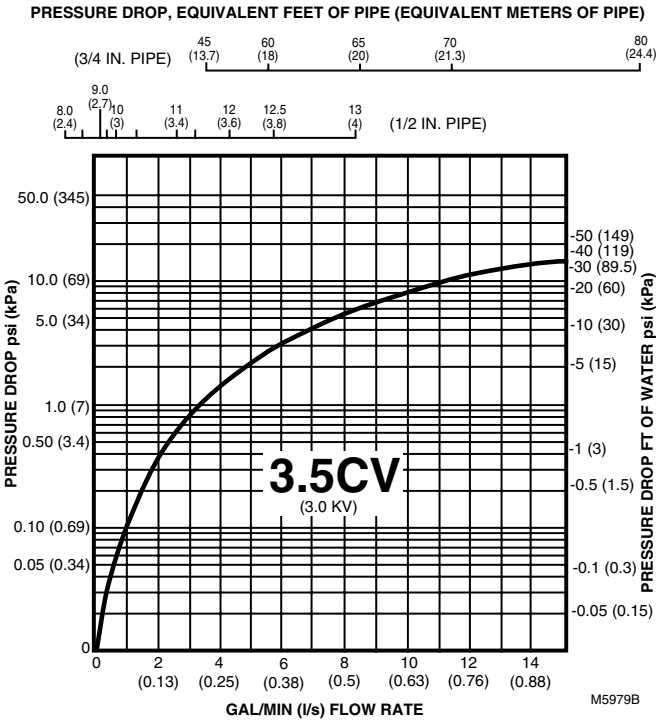

Fig. 5. Flow characteristics of 3.5 C_V (3.0 kV) valve.

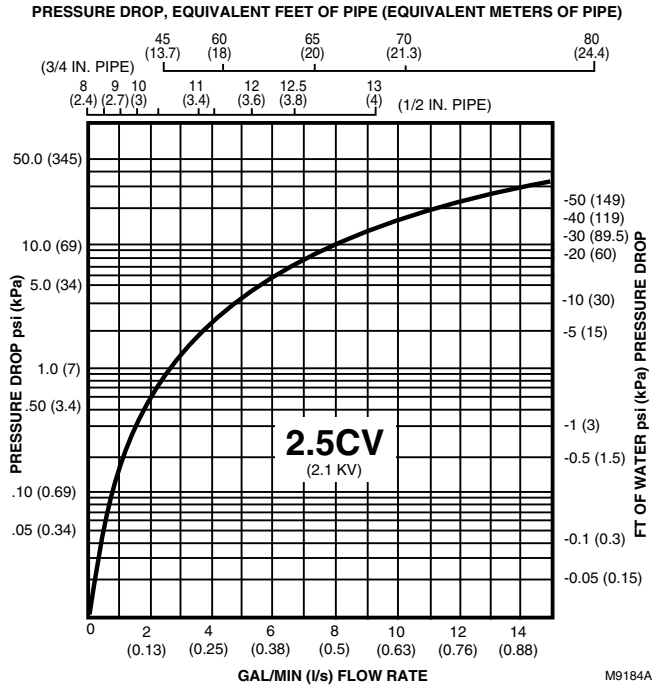

Fig. 4. Flow characteristics of V4043A model with 2.5 C_V (2.1 kv) rating and V4044A and V8044A bypass port (B) with 2.5 C_V (2.1 kv) (reduced) rating.

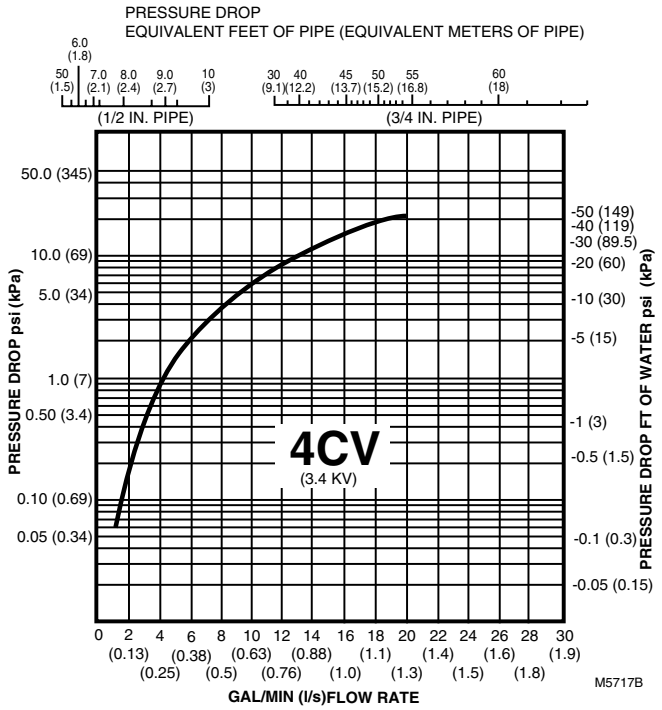

Fig. 6. Flow characteristics of 4 C_V (3.4 kV) valve.

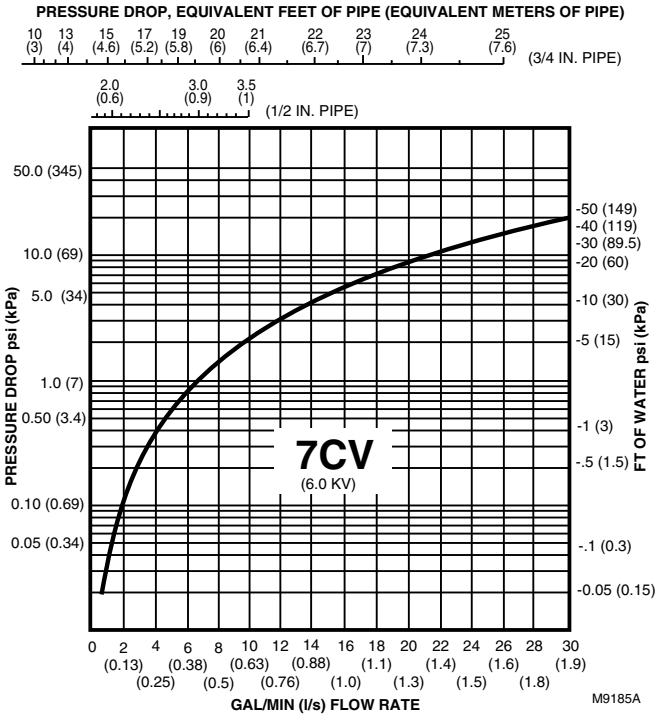

Fig. 7. Flow characteristics of 7 C_V (6.0 kV) valve.

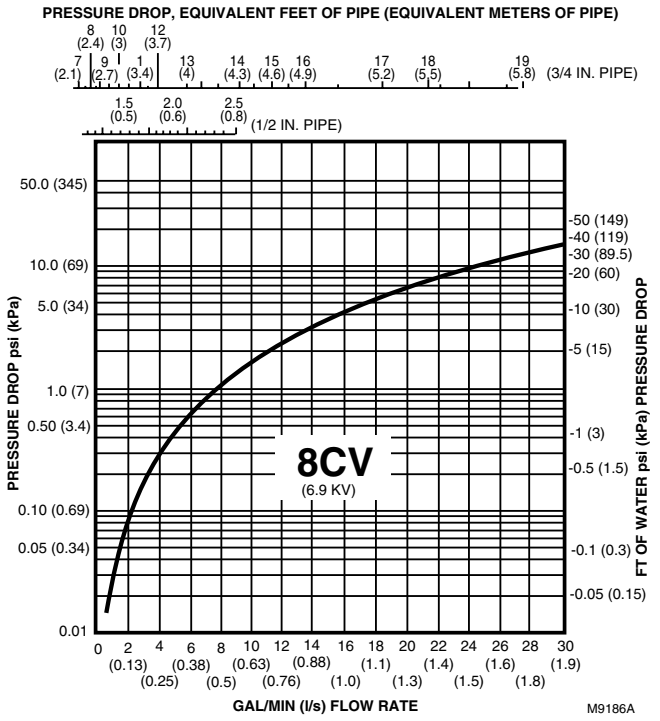

Fig. 8. Flow characteristics of 8 C_V (6.9 kV) valve.

INSTALLATION

When Installing this Product…

1. Read these instructions carefully. Failure to follow them could damage the product or cause a hazardous condition.
2. Check the ratings given in the instructions and on the product to make sure the product is suitable for your application.
3. Installer must be a trained, experienced service technician.
4. After installation is complete, check out product operation as provided in these instructions.

⚠ CAUTION

1. Disconnect power supply before connecting wiring to prevent electrical shock or equipment damage.
2. Normally it is not necessary to remove the powerhead from the valve body during installation. If the valve must be disassembled, be certain that it is reassembled with the water flow in the direction of the arrow. Reversal of the powerhead results in damage to the gear train.
3. On 24V systems, never jumper the valve coil terminals even temporarily. This can burn out the heat anticipator in the thermostat.

IMPORTANT

Use this valve in hydronic heating systems that do not contain dissolved oxygen in the system water. The dissolved oxygen, which is found in systems that have a frequent source of makeup water, causes the rubber plug inside the valve to deteriorate and eventually fail.

Mounting

The valve can be mounted in any position on a vertical line. See Fig. 9. If the valve is mounted horizontally; the powerhead must be even with or above the center line of the piping. Make sure to leave enough room above the powerhead to remove the cover for servicing.

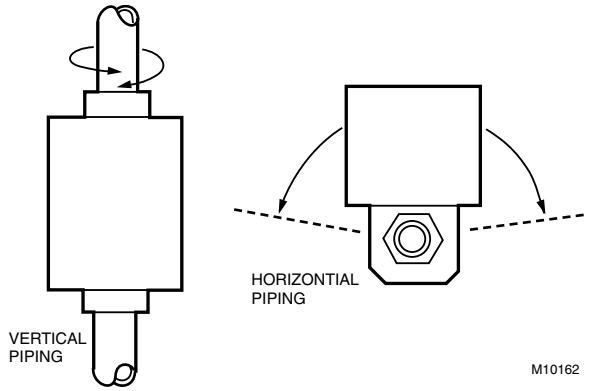

Fig. 9. Mounting positions.

Mount the valve directly in the tube or pipe. Make sure that the flow through the valve is in the direction indicated by the arrow stamped on the valve body.

On diverting valves, the three fittings or ports are labeled on the bottom of the valve body casting. See Fig. 1. Port AB is the inlet port and is open at all times. Port A is closed when the valve is de-energized; port B is open when the valve is de-energized. Refer to the equipment manufacturer instructions to determine which port (A or B) should be connected to the coil bypass.

Flare Fitting Models

Use new, properly reamed pipe, free from chips. The valve body is threaded for standard 5/8 in. OD copper, 45 degree SAE flare fitting nuts. These nuts are not furnished with the valve and must be obtained separately.

Sweat Copper Models

1. Use new, properly reamed pipe, free from dents or corrosion.
2. Place the valve on the pipe. Set the manual opening lever to MAN. OPEN position before applying heat. This protects the plug inside the valve by removing it from the seat.
3. Sweat the joints, keeping the outer surface free from solder. DO NOT use silver solder because of the high melting temperature required.

To Install Replacement Powerhead

System with Old Style Valve Bodies (Series 1-5)

To install a replacement powerhead in a system with an old style body (series 1-5), the valve body must be converted to accept the new powerhead using part no. 40003918 Conversion Kit. The kit includes a metal plate with a driveshaft and rubber plug, O-ring, and four screws.

IMPORTANT

Converting the valve body for use with the new powerhead does not require removal of the valve body from the pipeline. However, it is necessary to drain the water from the system before beginning the conversion.

1. Disconnect the power supply before connecting the wiring to prevent electrical shock or equipment damage.
2. Disconnect the leadwires to the powerhead at the terminal block or conduit connection. Remove the conduit or cable connector if fitted. Label each wire for rewiring later.
3. Drain the water from the system.
4. Remove the old powerhead from the valve body (Fig. 10):
   a. Place the manual opening lever (normally closed models only) on the old powerhead in the MAN. OPEN position (see Fig. 10A).
   b. Remove the cover (Fig. 10B).
   c. With the cover off, remove the four screws securing the powerhead to the valve body.
   d. Lift the powerhead off the valve body (Fig. 10C).
   e. Remove the O-ring from the top of the valve body.
5. Install 40003918 Conversion Kit (Fig. 11):
   a. Insert the new O-ring in the valve body.
   b. Place metal plate with the rubber plug on top of the valve body. Make sure the guide pins on the underside of the metal plate fit into the recesses on the valve body.
   c. Secure the metal plate to the valve body with the four screws (two sets) provided. One set of screws has heads with recessed threads to insert screws for mounting the new powerhead; insert this set into the larger screw openings. The other set has domed heads; insert this set into the smaller screw openings. Each set of screws must be inserted in opposite corners of the metal plate so the screws sit flat on the plate. Make sure the guide pins on the plate fit into the recesses on the valve body.
6. Install new powerhead (see Fig. 12):
   a. Place the manual opening lever (normally closed models only) on the new powerhead in the MAN. OPEN position.
   b. Fit the powerhead onto the valve body, ensuring that the shaft seats correctly. The powerhead should be aligned with the manual opening lever or slot for lever at the port A end of the valve body.
   c. Secure the powerhead to the valve body with the two screws provided.
   d. If fitted, reconnect the conduit or cable. Reconnect the leadwires at the powerhead.
   e. Replace the powerhead cover.
7. Turn on the power.

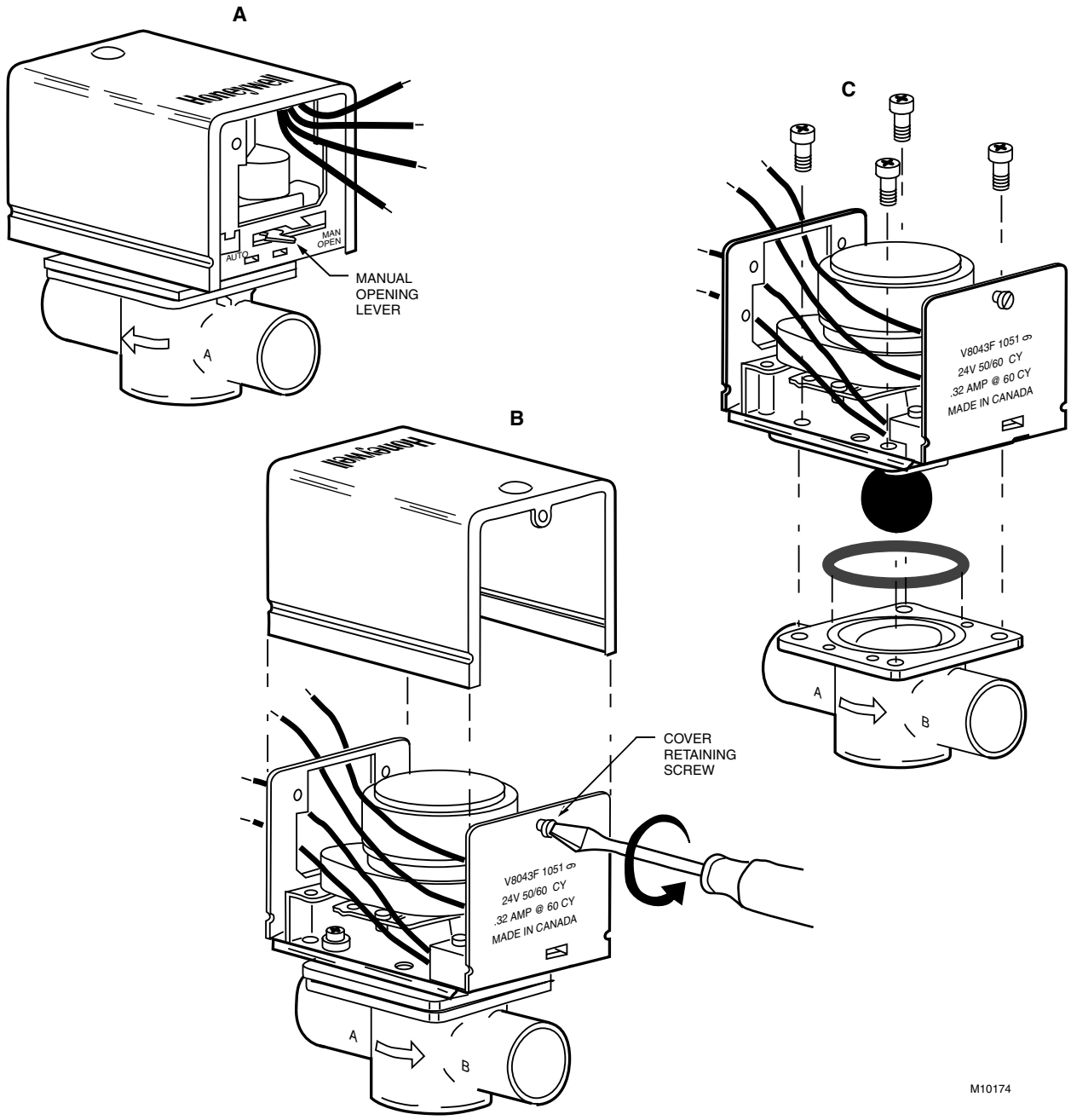

Fig. 10. Remove old powerhead from systems using old style valve bodies.

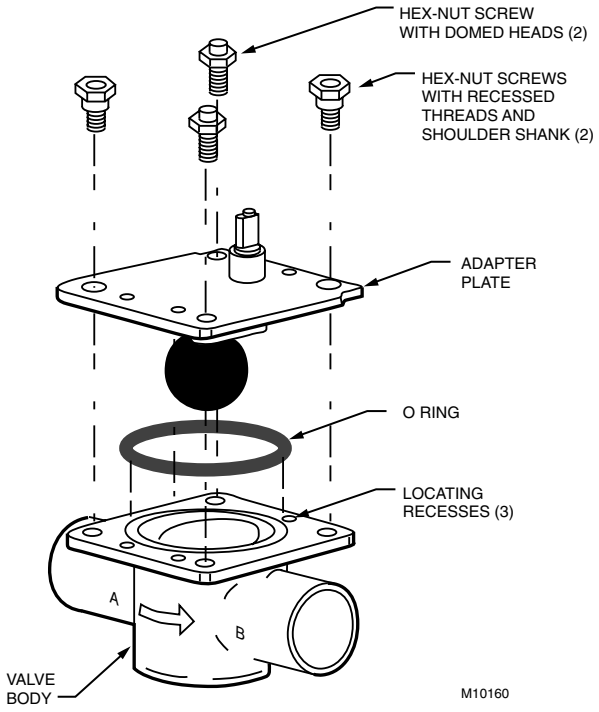

Fig. 11. Install 40003918 Conversion Kit.

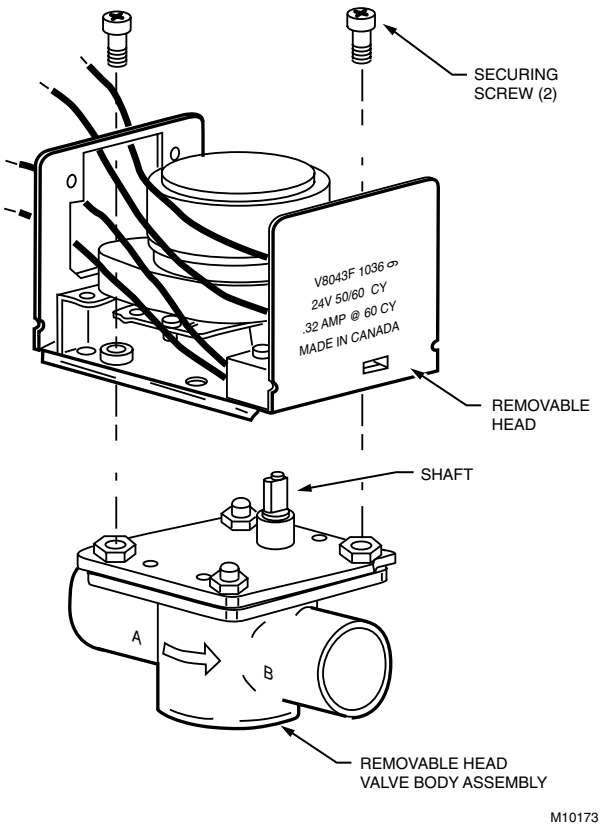

Fig. 12. Install new powerhead.

Systems with New Style Valve Bodies (Series 6)

IMPORTANT

On a new style valve body or a valve body that was converted to accept the new powerhead, it is not necessary to drain the system if the valve body remains in the pipeline.

❶ Disconnect the power supply before connecting the wiring to prevent electrical shock or equipment damage.

❷ Disconnect the leadwires to the powerhead at the terminal block or conduit connection. Remove the conduit or cable connector, if fitted. Label each wire for rewiring.

❸ Remove the old powerhead (see Fig. 13):
- a. Place the manual opening lever (normally closed models only) on the old powerhead in the MAN. OPEN position (Fig. 13A).
- b. Remove the screw securing the cover to the powerhead (Fig. 13B).
- c. Lift off the cover from the powerhead.
- d. Remove the two screws securing the powerhead to the valve body (Fig. 12).
- e. Lift the powerhead off the valve body.

❹ Install the new power head (see Fig. 12):
- a. Place the manual opening lever (normally closed models only) on the new powerhead in the MAN. OPEN position.
- b. Fit the powerhead onto the valve body, ensuring that the shaft seats correctly. The powerhead should be aligned with the manual opening lever or slot for lever at the port A end of the valve body.
- c. Secure the powerhead to the valve body with the two screws provided.
- d. If fitted, reconnect the conduit or cable. Reconnect the leadwires to the powerhead.
- e. Replace the powerhead cover.

❺ Turn on the power.

Wiring

Disconnect the power supply before connecting wiring to prevent electrical shock or equipment damage.

All wiring must comply with local codes and ordinances. Connections to the individual valves are shown in Fig. 14 and 15. See Fig. 16 through 22 for typical hookups.

If replacing a Taco, Dole, Flair or White Rodgers 3-wire valve with a 2-wire V8043E or F, see Fig. 23 through 35. Check that the pressure rating of the new valve is appropriate for the application.

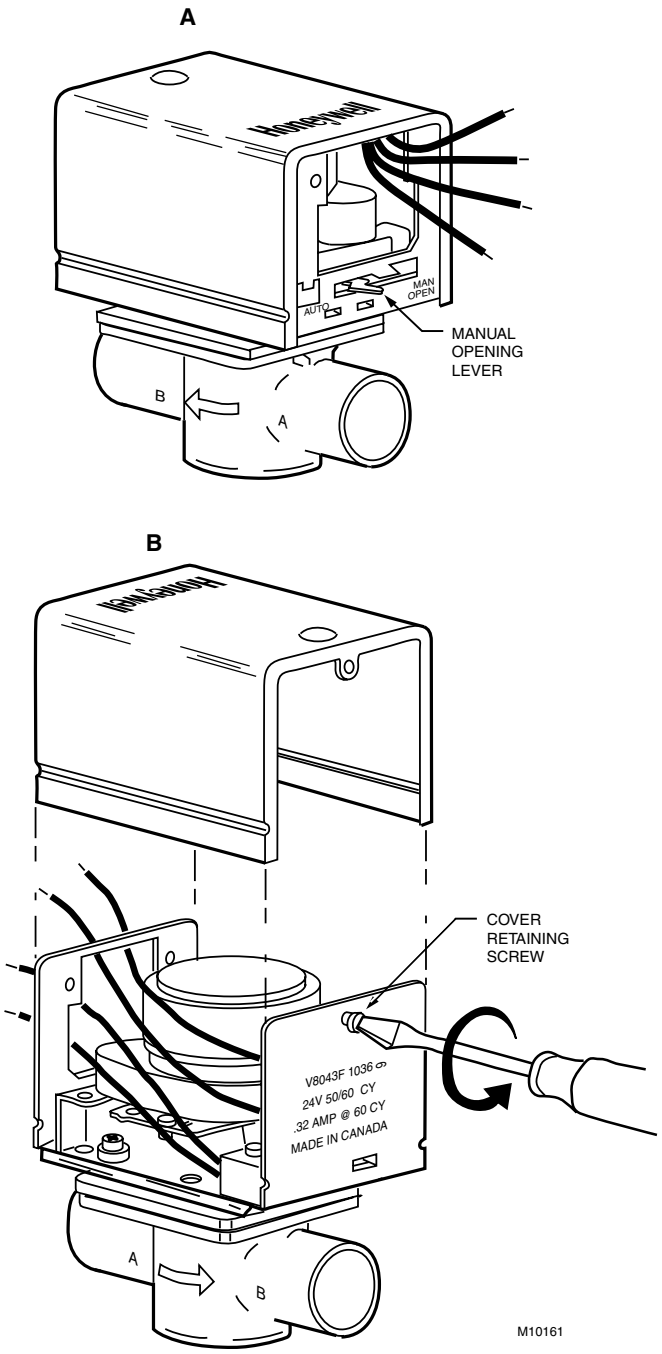

Fig. 13. Remove old powerhead from systems using new style valve bodies.

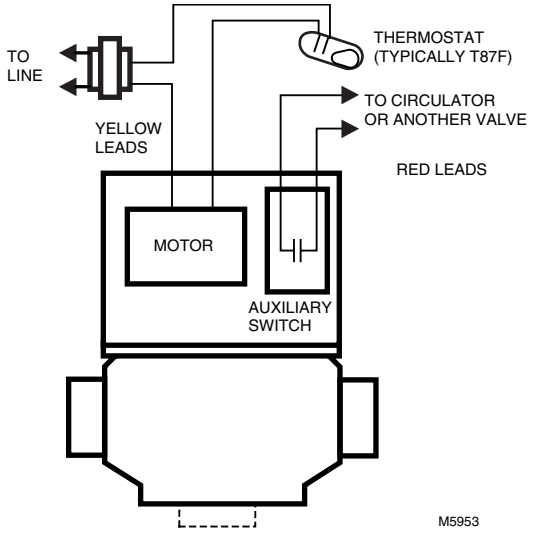

Fig. 14. Typical wiring for V8043E, V8044E.

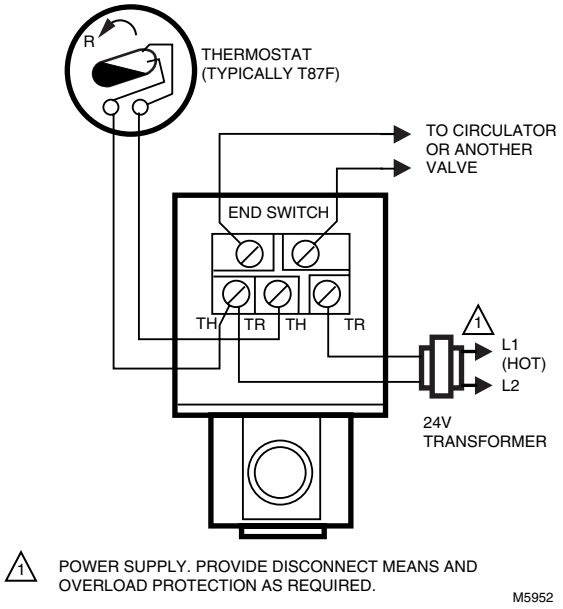

Fig. 15. Typical wiring for V8043F.

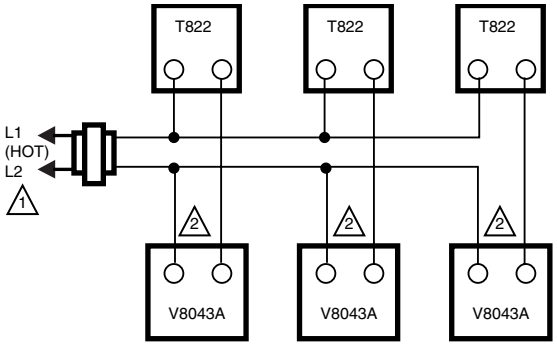

1 POWER SUPPLY. PROVIDE DISCONNECT MEANS AND OVERLOAD PROTECTION AS REQUIRED.

2 CONNECT V8043A BLACK LEADWIRE TO THERMOSTAT.

M10168

Fig. 16. T822 Thermostat, V8043A valve hookup.

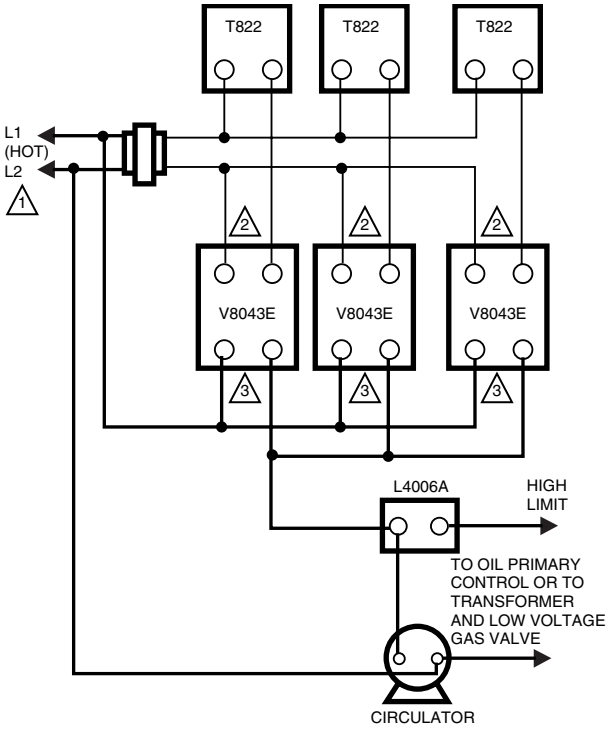

1 POWER SUPPLY. PROVIDE DISCONNECT MEANS AND OVERLOAD PROTECTION AS REQUIRED.

2 CONNECT V8043E YELLOW LEADWIRE TO THERMOSTAT.

3 CONNECT V8043E RED LEADWIRES TO L1 (HOT) LINE AND PRIMARY CONTROL.

M10169

Fig. 17. T822, V8043E zone hookup for gas or oil. No domestic hot water.

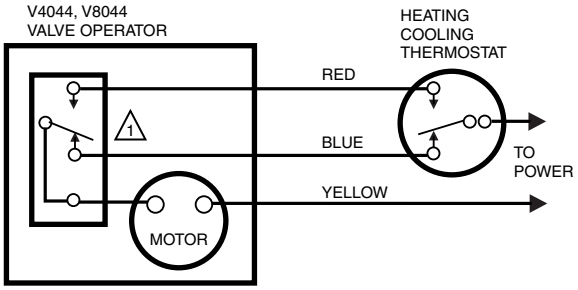

1 AQUASTAT® CHANGEOVER CONTROL SWITCHES TO HEATING (RED) AT FLUID TEMPERATURE OF 85°F (29°C) MAX TO COOLING (BLUE) AT FLUID TEMPERATURE OF 60°F (18°C) MIN.

M10171

Fig. 18. Wiring diagram for V4044 and V8044 with Aquastat® changeover control.

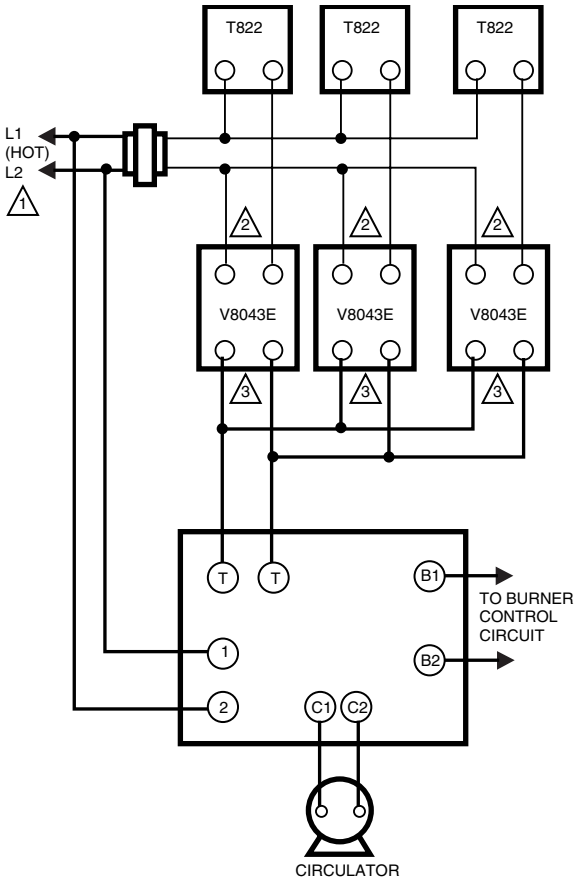

1 POWER SUPPLY. PROVIDE DISCONNECT MEANS AND OVERLOAD PROTECTION AS REQUIRED.

2 CONNECT V8043E YELLOW LEADWIRE TO THERMOSTAT.

3 CONNECT V8043E RED LEADWIRES TO AQUASTAT®.

M10170

Fig. 19. T822, V8043E zone hookup for gas or oil with or without domestic hot water. Without domestic hot water, use L8148J for gas, and L8148A for oil. With domestic hot water, use L8124E for gas, and L8124A or C for oil.

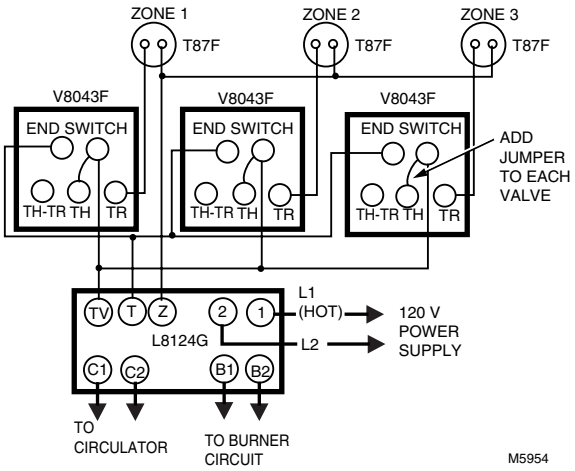

Fig. 20. Typical 3-zone system. Use an AT87A Transformer to power up to five more zone valves.

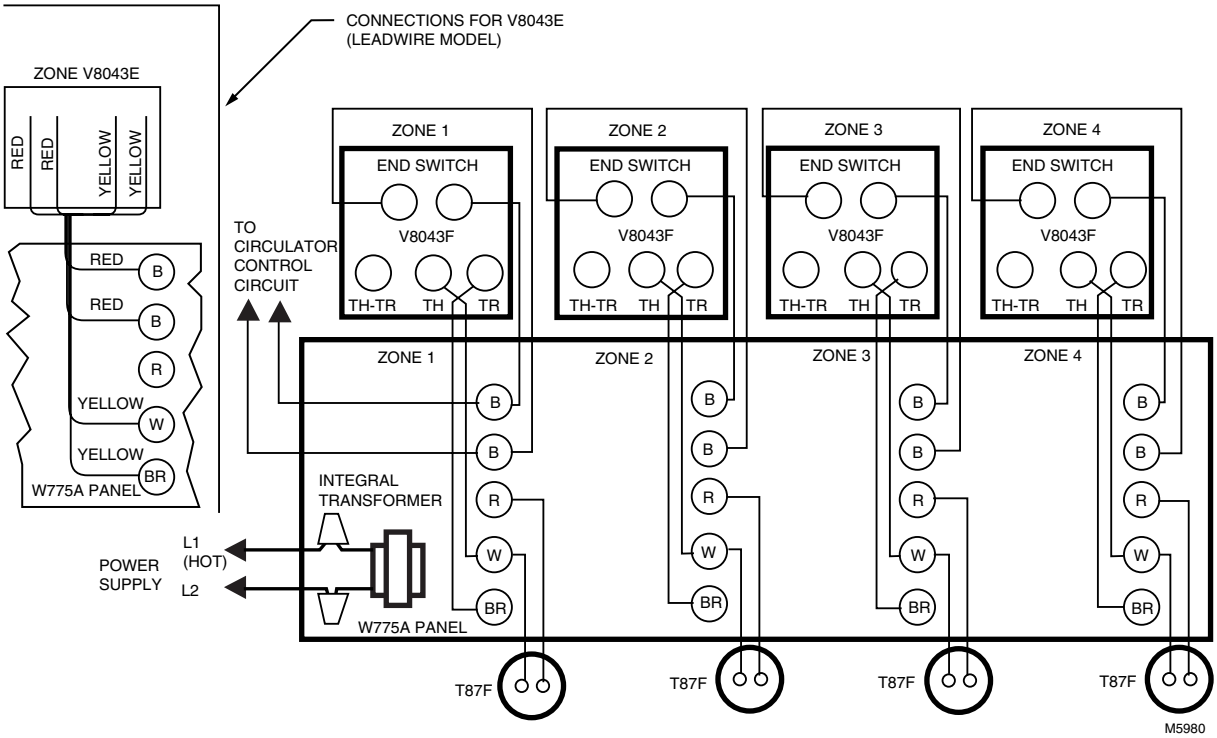

Fig. 21. Typical 4-zone system. Use an additional W775A to power up to four more zone valves.

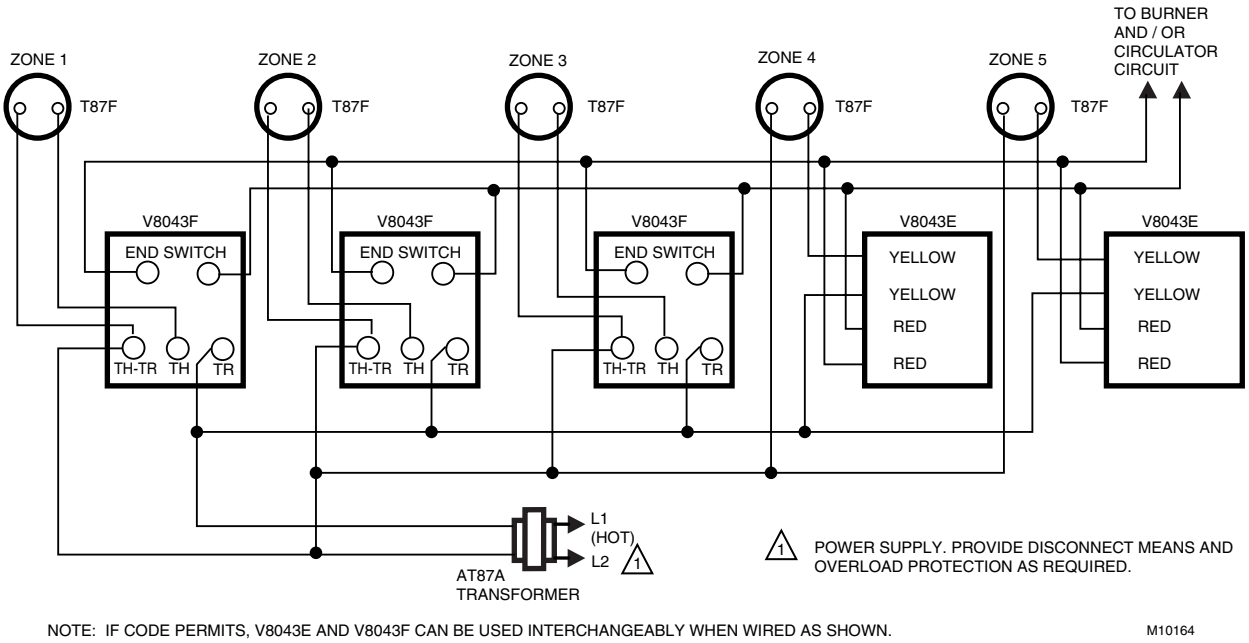

Fig. 22. Typical 5-zone system. Use an AT87A Transformer to power up to five more zone valves.

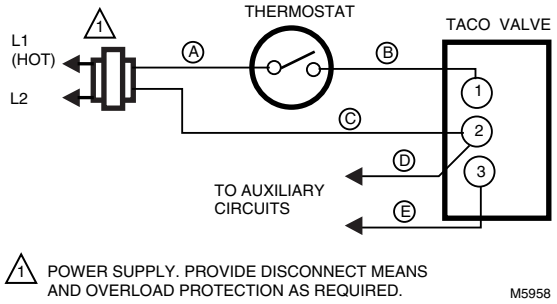

Fig. 23. Existing Taco system. (Wires are identified with letters to correspond with wires in Fig. 24 and 25.)

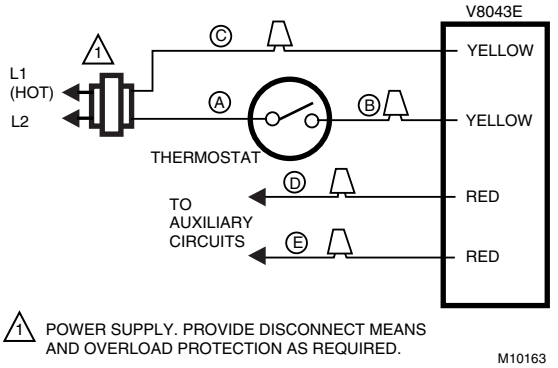

Fig. 24. Wiring Honeywell V8043E to Taco System. (Wires are identified with letters to correspond with wires in Fig. 23.)

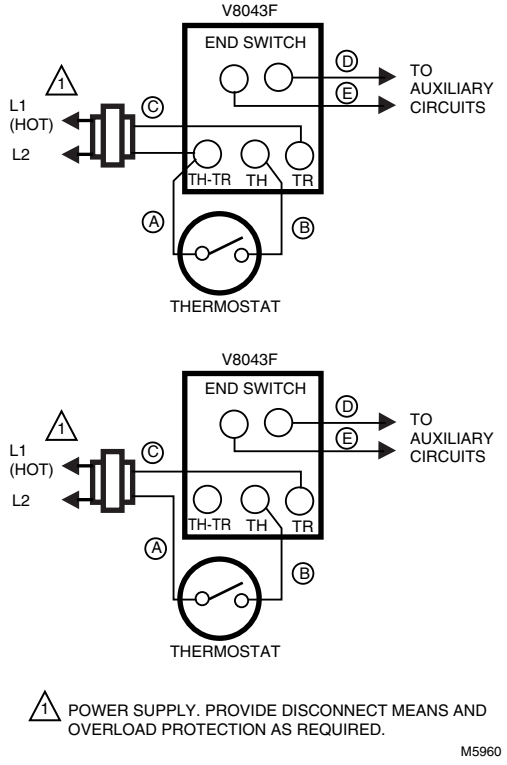

Fig. 25. Wiring Honeywell V8043F to Taco System (two options). (Wires are identified with letters to correspond with wires in Fig. 23.)

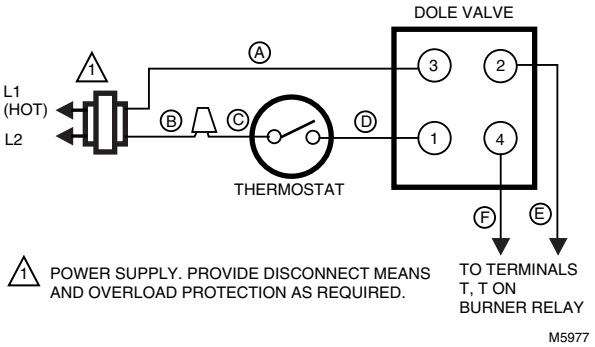

Fig. 26. Existing Dole System. (Wires are identified with letters to correspond with wires in Fig. 27 and 28.)

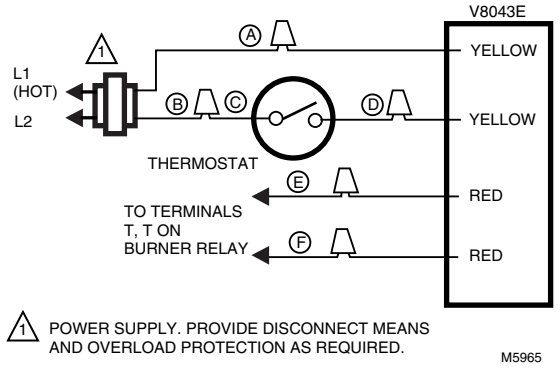

Fig. 27. Wiring Honeywell V8043E to Dole System. (Wires are identified with letters to correspond with wires in Fig. 26.)

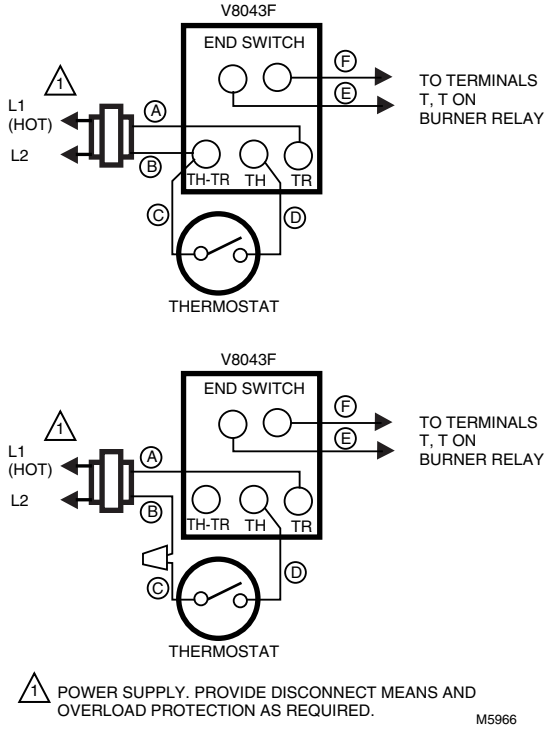

Fig. 28. Wiring Honeywell V8043F to Dole System (two options). (Wires are identified with letters to correspond with wires in Fig. 26.)

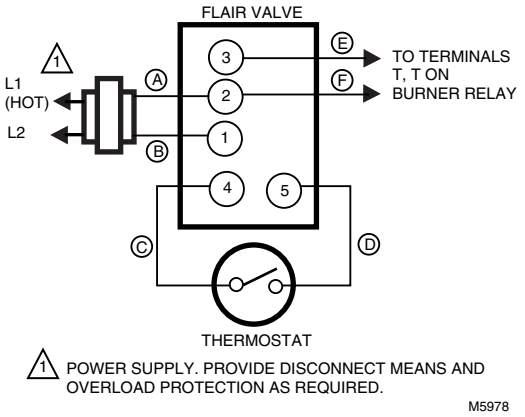

Fig. 29. Existing Flair System. (Wires are identified with letters to correspond with wires in Fig. 30 and 31.)

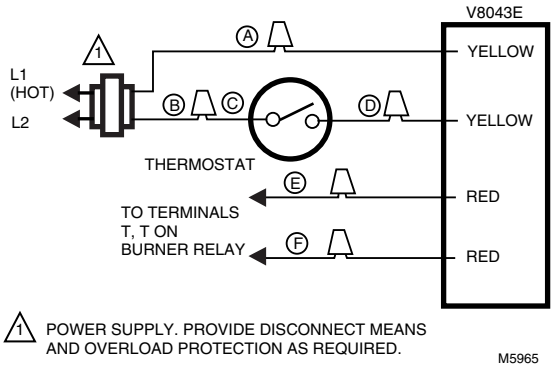

Fig. 30. Wiring Honeywell V8043F to Flair System. (Wires are identified with letters to correspond with wires in Fig. 29.)

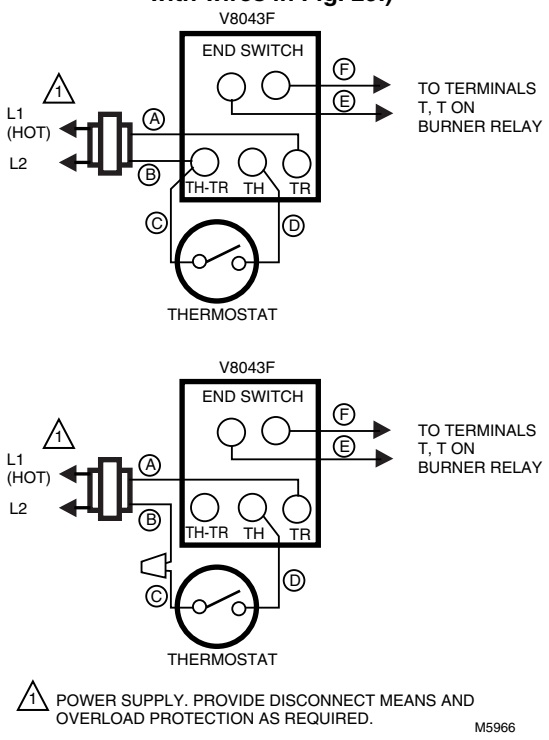

Fig. 31. Wiring Honeywell V8043F to Flair System (two options). (Wires are identified with letters to correspond with wires in Fig. 29.)

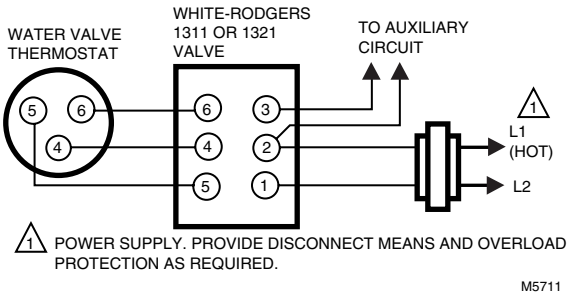

Fig. 32. Existing White-Rodgers System.

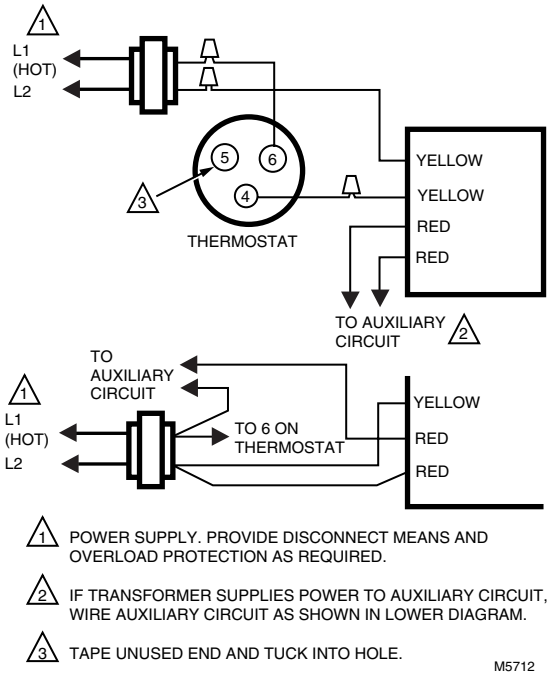

Fig. 33. Wiring Honeywell V8043E to White-Rodgers System.

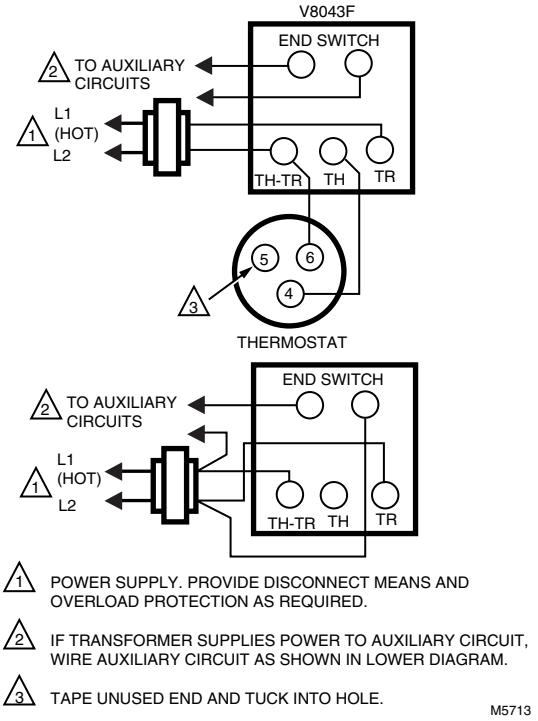

Fig. 34. Wiring Honeywell V8043F to White-Rodgers System (one option).

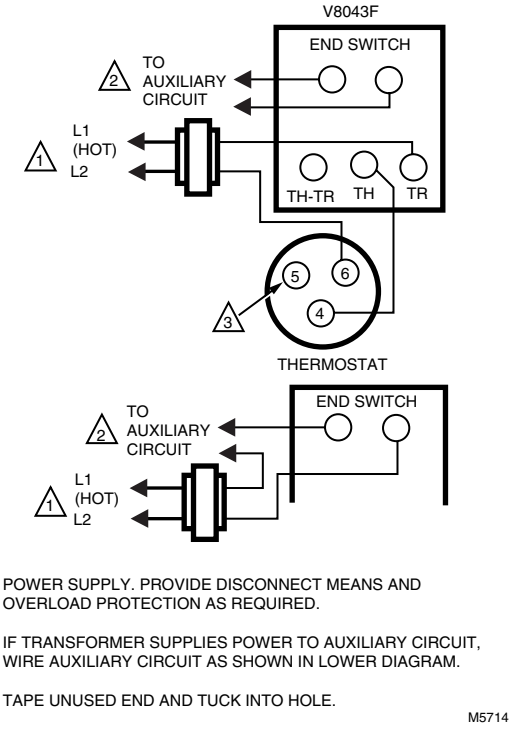

Fig. 35. Wiring Honeywell V8043F to White-Rodgers System (alternate option).

OPERATION AND CHECKOUT

⚠ CAUTION

On 24V systems, never jumper the valve coil terminals even temporarily. This can burn out the heat anticipator in the thermostat.

Operation

Automatic Operation

On a call for heat by the zone thermostat, the valve opens and its auxiliary switch contacts make, closing the circuit to the system circulator. In a multizone system with all the valve auxiliary switches wired in parallel, any zone calling for heat can operate the circulator. When the call for heat ends, the valve closes by integral spring return. The auxiliary switch contacts break the circulator circuit.

Manual Operation

The motorized valve can be opened manually by lifting the manual opening lever over the stop and pushing slowly and firmly to the MAN. OPEN position. The stop permits the valve to be locked in the open position. The valve returns to automatic position when the valve is energized.

Normally Closed Models

With the manual opener set to AUTO and the powerhead energized, the valve is opened as shown in Fig. 36A. When the powerhead is de-energized, a spring-return mechanism drives the valve to the closed position as shown in Fig. 36B. The valve can also be opened with no electrical power by moving the manual opening lever over the stop and pushing slowly and firmly to the MAN. OPEN position. The stop permits the valve to be locked in the open position. The valve returns to the automatic position when the valve is energized.

Auxiliary switch is not energized when the valve is manually opened.

Normally Open Models

When the powerhead is de-energized, a spring-return mechanism drives the valve to the open position (Fig. 36A). When energized, the valve is closed as shown in Fig. 36B. A reverse-acting thermostat is required to control a normally open valve.

NOTE: Inlet Port is stamped A and Outlet Port is stamped B on the valve body.

Fig. 36. V8043 operation for normally closed valve.

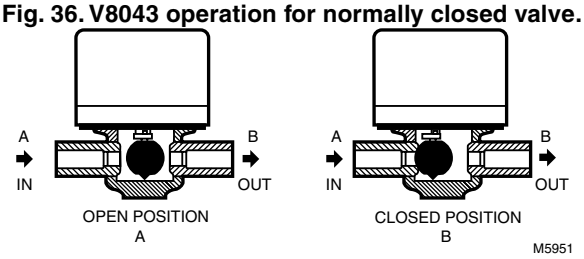

Checkout

1. Raise the setpoint on the zone thermostat above the room temperature to initiate a call for heat.
2. Observe all control devices—the valve should open and the auxiliary switch should make the circuit to the circulator or other valve at the end of the opening stroke.
3. Lower the setpoint on the zone thermostat below the room temperature.
4. Observe the control devices. The valve should close and the auxiliary equipment should stop.

Service

This valve should be serviced by a trained, experienced service technician.

1. If the valve is leaking, drain the system and check to see if the O-ring needs replacing.
2. If the gear train is damaged, replace the entire powerhead assembly. See the Installation section. If the motor is burned out, replace the motor. See Replacement Parts list in the TRADELINE® Catalog.

NOTE: Honeywell zone valves are designed and tested for silent operation in properly designed and installed systems; however, water noises can occur as a result of excessive water velocity or piping noises can occur in high temperature (higher than 212°F (100°C) systems with insufficient water pressure. Valves are designed for normal cycling operations. Product life will be shortened if energized continuously.

Home and Building Control
Honeywell Inc.
Honeywell Plaza
P.O. Box 524
Minneapolis MN 55408-0524

Home and Building Control
Honeywell Limited-Honeywell Limitée
155 Gordon Baker Road
North York, Ontario
M2H 2C9

Honeywell Asia Pacific Inc.
Room 3213-3225
Sun Hung Kai Centre
No. 30 Harbour Road
Wanchai
Hong Kong

Honeywell Latin American Division
Miami Lakes Headquarters
14505 Commerce Way Suite 500
Miami Lakes FL 33016

Honeywell Europe S.A.
3 Avenue du Bourget
B-1140 Brussels Belgium