HKS

ELECTRIC HEAT KIT

INSTALLATION INSTRUCTIONS

© 2012 Goodman Manufacturing Company, L.P.
5151 San Felipe, Suite 500, Houston, TX 77056
www.goodmanmfg.com -or- www.amana-hac.com
P/N: IO-776 Date: April 2012

Attention Installing Personnel

As a professional installer, you have an obligation to know the product better than the customer. This includes all safety precautions and related items.

Prior to actual installation, thoroughly familiarize yourself with this Instruction Manual. Pay special attention to all safety warnings. Often during installation or repair, it is possible to place yourself in a position which is more hazardous than when the unit is in operation.

Remember, it is **your** responsibility to install the product safely and to know it well enough to be able to instruct a customer in its safe use.

Safety is a matter of common sense...a matter of thinking before acting. Most dealers have a list of specific good safety practices...follow them.

The precautions listed in this Installation Manual are intended as supplemental to existing practices. However, if there is a direct conflict between existing practices and the content of this manual, the precautions listed here take precedence.

Safety Precautions

The following symbols and labels are used throughout this manual to indicate immediate or potential safety hazards. It is the owner's and installer's responsibility to read and comply with all safety information and instructions accompanying these symbols. Failure to heed safety information increases the risk of personal injury, property damage, and/or product damage.

WARNING

HIGH VOLTAGE !

Disconnect ALL power before servicing. Multiple power sources may be present. Failure to do so may cause property damage, personal injury or death.

WARNING

ONLY individuals meeting the requirements of an "Entry Level Technician", at a minimum, as specified by the Air-Conditioning, Heating, and Refrigeration Institute (AHRI) may use this information. Attempting to install or repair this unit without such background may result in product damage, personal injury, or death.

WARNING

This appliance MUST be installed following the ANSI/NFPA 70 (National Electric Code) and other applicable codes.

WARNING

Failure to follow these instructions can cause fire, explosion, electrical shock, property damage, personal injury or death.

CAUTION

To avoid possible personal injury, use extreme caution is using power tools to remove the small breaker mounting brackets. The brackets may quickly rotate and cause injury. or death.

DANGER
PELIGRO

CARBON MONOXIDE POISONING HAZARD

Special Warning for Installation of Furnace or Air Handling Units in Enclosed Areas such as Garages, Utility Rooms or Parking Areas

Carbon monoxide producing devices (such as an automobile, space heater, gas water heater, etc.) should not be operated in enclosed areas such as unventilated garages, utility rooms or parking areas because of the danger of carbon monoxide (CO) poisoning resulting from the exhaust emissions. If a furnace or air handler is installed in an enclosed area such as a garage, utility room or parking area and a carbon monoxide producing device is operated therein, there must be adequate, direct outside ventilation.

This ventilation is necessary to avoid the danger of CO poisoning which can occur if a carbon monoxide producing device continues to operate in the enclosed area. Carbon monoxide emissions can be (re)circulated throughout the structure if the furnace or air handler is operating in any mode.

CO can cause serious illness including permanent brain damage or death.

B10259-216

Shipping Inspection

All units are securely packed in shipping containers tested according to ISTA specifications. The carton must be checked upon arrival for external damage. If damage is found, a request for inspection by carrier's agent must be made in writing immediately.

Inspect the kit carefully on arrival for damage and screws or wires which may have come loose in transit. In the event of damage the consignee should:

1. Make a notation on delivery receipt of any visible damage to shipment or container.
2. Notify carrier promptly and request an inspection.
3. With concealed damage, carrier must be notified as soon as possible - preferably within five days.
4. File the claim with the following support documents within a nine month statute of limitations.

- Original or certified copy of the Bill of Lading, or indemnity bond.
- Original paid freight bill or indemnity in lieu thereof.
- Original or certified copy of the invoice, showing trade and other discounts or reductions.
- Copy of the inspection report issued by carrier's representative at the time damage is reported to carrier.

The carrier is responsible for making prompt inspection of damage and for a thorough investigation of each claim. The distributor or manufacturer will not accept claims from dealers for transportation damage.

Standard Air handler Installation

WARNING

HKS ELECTRIC HEATER KITS MAY ONLY BE INSTALLED IN ARUFXX14YY AND ARPTXX14YY MODELS (WHERE XX IS THE TWO-DIGIT SIZE AND YY ARE REVISION LETTERS).

WARNING

ONLY INSTALL HEATER KITS INTO AN AIR HANDLER THAT ARE LISTED AS APPROVED ON THE RATING PLATE OF THE AIR HANDLER.

WARNING

TO PREVENT PERSONAL INJURY OR DEATH WHEN INSTALLING IN A GARAGE, THE ELEMENT MUST BE AT LEAST 18" ABOVE THE FLOOR.

CAUTION

TO AVOID PROPERTY DAMAGE OR PERSONAL INJURY DUE TO FIRE, USE ONLY COPPER CONDUCTORS.

1. Remove the upper access panel from the air handler.
2. Remove and retain the four (4) screws securing the cover plate. Remove and discard the cover plate.
3. For electric heat kits with circuit breakers, remove the two screws securing the circuit breaker mounting plate to the electric heat face plate.
4. Slide the electric heat kit into the opening in the air handler, making sure the direction of airflow decal attached to the electric heat face plate is pointing in the correct direction, and secure the electric heat face plate using the screws removed in Step 2. Use caution to not bend or damage the electric heating elements, the limit switches or fuses during this process. See Figure1.

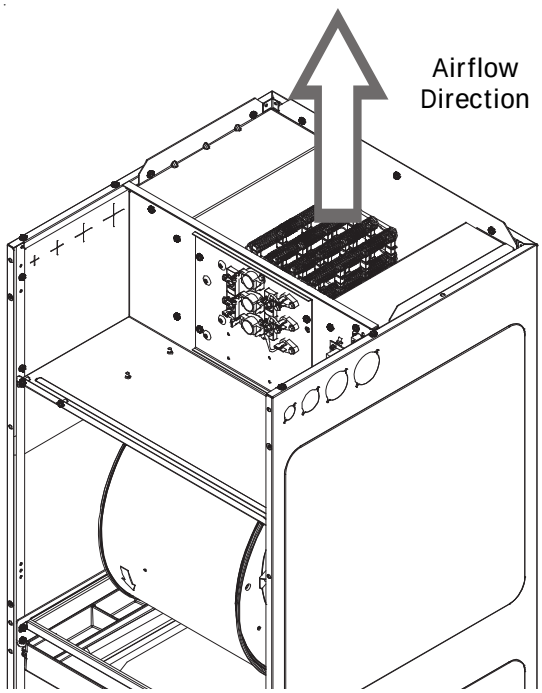

Figure 1

5. For downflow applications with electric heat kits that have circuit breakers, the circuit breakers must be rotated 180 degrees (such that the ON position will be with the circuit breaker handles up). To do so, remove and retain the 2 screws securing the circuit breaker clamps, rotate the circuit breakers and clamps 180 degrees, then use the same 2 screws to re-secure the circuit breakers. See Figure 2.

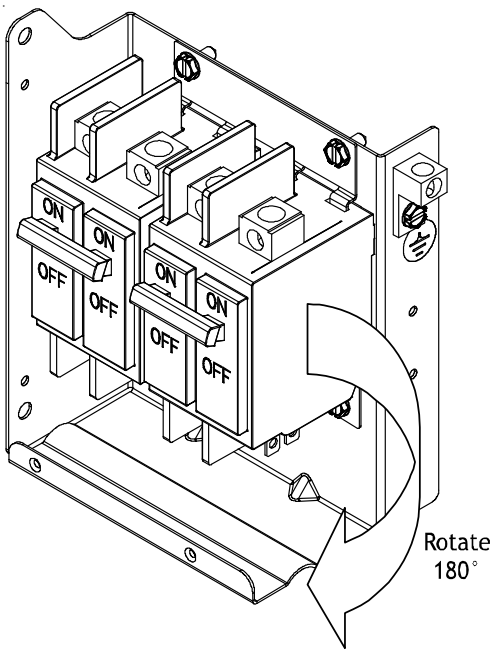

Figure 2

6. For all electric heat kits with circuit breakers, mount the circuit breaker mounting bracket as shown in Figure 3, using the supplied screws. Insert the four (4) screws as shown in Figure 3 (two through the control panel flange and two into the cabinet corner post).

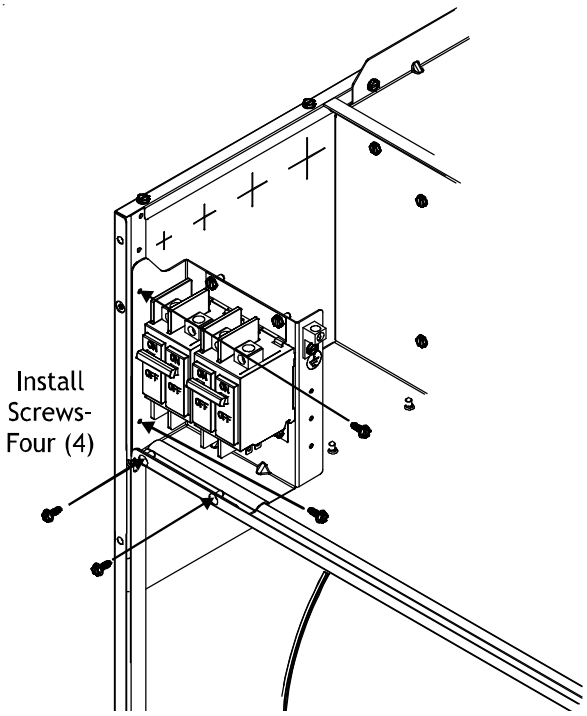

Figure 3

7. For all electric heat kits with circuit breakers, break out the appropriate area of the plastic circuit breaker cover on the upper access panel of the air handler. The circuit breaker cover may be rotated if necessary. See Figure 4.

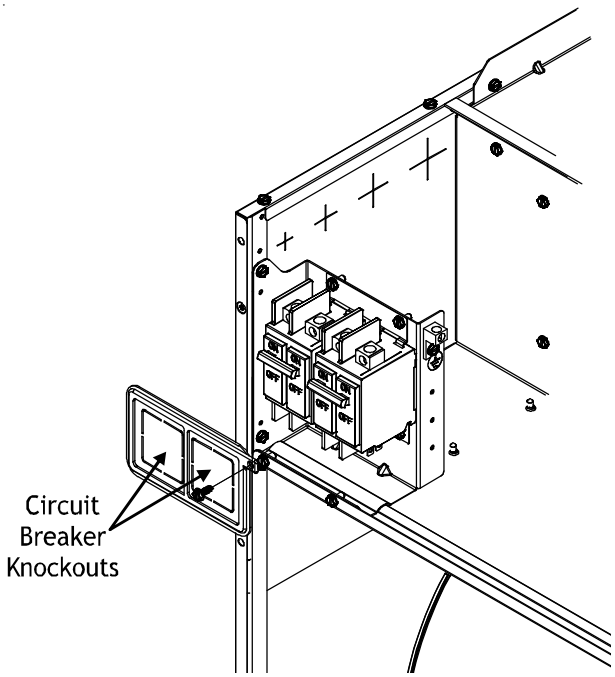

Figure 4

Electrical Connections

WARNING

HIGH VOLTAGE !

Disconnect ALL power before servicing. Multiple power sources may be present. Failure to do so may cause property damage, personal injury or death.

1. All electric heat kits have lugs for connection of high voltage power supply. Insert the power leads into the lugs (either on the terminal block or circuit breaker) and tighten. The power must be routed through a strain relief as they enter the cabinet. For two power supply electric heat kits (all circuit breaker connections), be sure to connect the correct power supply to the correct circuit breaker – check the air handler rating plate for Minimum Circuit Ampacity and Maximum Overcurrent Protection electrical ratings of each circuit.

2. Connect the ground wire from the power supply to the ground lug provided in the air handler. For two power supply electric heat kits, one ground lug is provided with the air handler and the second ground lug is supplied with the electric heat kit (on the circuit breaker mounting plate). Use proper torque to secure the ground wire to the ground lug.

3. For low voltage connections, remove the female multi-pin connector with the jumper wire provided with the air handler from the male multi-pin connecter provided with the air handler. Insert the female multi-pin connector provided with the electric heat kit into the male multi-pin connector provided with the air handler. **Note:** it can be inserted in one position only.

4. For 25 kW electric heat kits, apply the wiring diagram provided with the electric heat kit over the wiring diagram found in the air handler. For all other electric heat kits, mark an "X" on the wiring diagram according to the number of heater element rows installed.

Start-Up

1. Double check all electrical connections and screws to ensure proper installation.

2. Replace the upper access panel on the air handler.

3. Make sure all circuit breakers and electrical power supply are on.

4. Install an ammeter on the power supply(s) to the air handler.

5. Turn the room thermostat setting to emergency heat and adjust the set point about 1°F above actual room temperature to "call for heat".

6. The blower should turn on within the first 10 seconds and up to the first 10kW of electric heat should turn on within 10-30 seconds.

7. Turn the room thermostat setting to off. The blower and all electric heat should turn off within 70 seconds.

Steps 8-10 are only for electric heat kits with more than 10kW.

8. Turn the room thermostat setting to emergency heat and adjust the set point about 5°F above actual room temperature to "call for heat".

9. The blower should turn on within the first 10 seconds, up to the first 10kW of electric heat should turn on within 10-30 seconds, and the additional electric heat above 10kW should turn on within 10-30 seconds after the room thermostat calls for second stage electric heat (this may vary depending on the room thermostat).

10. Turn the room thermostat setting to off. The blower and all electric heat should turn off within 70 seconds.

11. If the blower and / or electric heat do not cycle appropriately, disconnect all power supplies and troubleshoot per service manual instructions.