Midea®
Heating & Air Conditioning

14SEER—R-410A

DESCRIPTION

The 14 SEER Series unit is the outdoor air conditioning element in a versatile climate-control system designed to create perfect comfort. It is constructed with a matching indoor coil component from Midea Unitary Products. This multi-functional, high-efficiency system meets all of your needs while offering industry-leading quality and unmatched value.

FEATURES

- The compressor is protected against high/low pressure and temperatures by a factory-installed high/low pressure switch and a temperature sensor which protects the compressor if undesirable operating conditions occur.
- The factory-installed discharge muffler helps insure quiet and stable operation.
- The low-pressure service valve provides easy access for service and installation.
- The factory-installed accumulator protects the compressor against liquid slugging.
- Crankcase heater that can protect the compressor from low ambient temperatures or refrigerant migration.
- High condenser coil temperature protection (127° F)
- High-quality condenser coils with inner-groove copper pipe and high-efficiency aluminum fin which absorbs the condensation water for maximum heat exchange.
- Anti-rust: painted galvanized steel cabinet, 1000 hours' salt spray test
- The operating ambient temperature range is : AC 64–109° F; HP 14–109° F

Due to continuous product improvement, specifications are subject to change without notice.
Visit us at www.midea.com or www.mideaaircon.com

WARRANTY

2-Year "No hassle" exchange for customer
3–5-Year for compressor
5-Year for parts

Tested in accordance with:

INTERTEK ETL LISTED C US

AHRI CERTIFIED™ www.ahridirectory.org
Liquid to Liquid Heat Exchangers
AHRI Standard 400

FOR DISTRIBUTION USE ONLY—NOT TO BE USED AT POINT OF RETAIL SALE

MIDEA CONDENSING UNIT NOMENCLATURE

M	OV	A	36	H	N1	M	14

Midea

Top Discharge

Generation

Capacity MBTU/H
36: 36 MBTU/H

C: Cooling Only
H: Heat Pump

Refrigerant:
N1: R410A
: R22

Power Supply:
M: 208/230/60Hz/1ph
X: 208/230/60Hz/3ph

SEER Rating

Physical and Electrical Data：

MODEL		MOVA-18CN1-M14T	MOVA-18HN1-M14T	MOVA-24CN1-M14T	MOVA-24HN1-M14T	MOVA-30CN1-M14T	MOVA-30HN1-M14T
Unit Supply Voltage		208/230V,60HZ,1Ph					
Normal Voltage Range		187~ 253V					
Max Circuit Ampacity		9.9	9.8	13.6	12.7	17.9	17
Max. Overcurrent Device Amps		15	15	20	20	25	25
Min. Overcurrent Device Amps		9.4	9.4	11.6	11.6	16	16
Compressor Type		Rotary	Rotary	Rotary	Rotary	Rotary	Rotary
Compressor	Rated Load Amps	6.65	7	8.75	8.75	12	12
	Locked Rotor Amps	32.6	32.6	34.8	34.8	59.93	59.93
Crankcase Heater			30		30		30
Fan Motor Amps	Rated Load	0.61	0.61	0.61	0.61	0.96	0.96
Fan Diameter Inches		17-3/4	18-7/8	18-7/8	18-7/8	23	23
Fan Motor	Rated HP	1/12	1/12	1/12	1/12	1/6	1/6
	Nominal RPM	1075	1075	1075	1075	825	825
	Nominal CFM	1581	1581	1581	1581	2999	2999
Coil	Face Area Sq. Ft.	9	10.15	10.15	10.15	12.9	12.9
	Rows Deep	1.7	1.7	2	2	2	2
	Fin / Inches	20	20	20	20	20	20
Liquid Line Set OD (Field Installed)		3/8	3/8	3/8	3/8	3/8	3/8
Vapor Line Set OD (Field Installed)		3/4	3/4	3/4	3/4	3/4	3/4
Unit Charge (Lbs. - Oz.)		6llbs,5oz	6lbs,10oz	6lbs,10oz	6lbs,10oz	7lbs,11ozs	7lbs,15oz
Charge Per Foot, Oz/ft.		0.6	0.6	0.6	0.6	0.6	0.6

MODEL		MOVA-18CN1-M14C	MOVA-18HN1-M14C	MOVA-24CN1-M14C	MOVA-24HN1-M14C	MOVA-30CN1-M14C	MOVA-30HN1-M14C
Unit Supply Voltage		208/230V,60HZ,1Ph					
Normal Voltage Range		187 ~ 253V					
Max Circuit Ampacity		11.2	7.0	14.7	15.6	16.2	17.5
Max. Overcurrent Device Amps		20	20	30	30	30	30
Min. Overcurrent Device Amps		11.9	11.9	17.5	17.5	18.7	18.7
Compressor Type		Scroll	Scroll	Scroll	Scroll	Scroll	Scroll
Compressor	Rated Load Amps	9	9	13.5	13.5	14.1	14.1
	Locked Rotor Amps	48	48	58.3	58.3	73	73
Crankcase Heater			30		30		30
Fan Motor Amps	Rated Load	0.61	0.61	0.61	0.61	0.96	0.96
Fan Diameter Inches		17-3/4	18-7/8	18-7/8	18-7/8	23	23
Fan Motor	Rated HP	1/12	1/12	1/12	1/12	1/6	1/6
	Nominal RPM	1075	1075	1075	1075	825	825
	Nominal CFM	1529	1581	1581	1581	2999	2999
Coil	Face Area Sq. Ft.	9	10.15	10.15	10.15	12.9	12.9
	Rows Deep	1.7	1.7	2	2	2	2
	Fin / Inches	20	20	20	20	20	20
Liquid Line Set OD (Field Installed)		3/8	3/8	3/8	3/8	3/8	3/8
Vapor Line Set OD (Field Installed)		3/4	3/4	3/4	3/4	3/4	3/4
Unit Charge (Lbs. - Oz.)		5lbs,5oz	7lbs,1oz	6lbs,10oz	7lbs,12oz	8lobs,6oz	8lbs,10oz
Charge Per Foot, Oz/ft.		0. 6	0.6	0.6	0.6	0.6	0.6

Physical and Electrical Data(be continued)

MODEL		MOVA-36CN1-M14	MOVA-36HN1-M14	MOVA-42CN1-M14	MOVA-42HN1-M14	MOVA-48CN1-M14	MOVA-48HN1-M14
Unit Supply Voltage		208/230V,60HZ,1Ph					
Normal Voltage Range		187~ 253V					
MaxCircuit Ampacity		20.2	19.5	24.6	21.6	28.4	30.9
Max. Overcurrent Device Amps		35	35	40	40	50	50
Min. Overcurrent Device Amps		21.9	21.9	24.1	24.1	29	29
Compressor Type		Scroll	Scroll	Scroll	Scroll	Scroll	Scroll
Compressor	Rated Load Amps	16.7	16.7	17.9	17.9	21.8	21.8
	Locked Rotor Amps	79	79	112	112	117	117
Crankcase Heater			30		30		30
Fan Motor Amps	Rated Load	0.96	0.96	1 67	1.67	1.67	1.67
Fan Diameter Inches		23-5/8	23-5/8	23	23	23	23
Fan Motor	Rated HP	1/6	1/6	1/3	1/3	1/3	1/3
	Nominal RPM	825	825	1075	1075	1075	1075
	Nominal CFM	3246	3246	4219	4219	4386	4386
Coil	Face Area Sq. Ft.	13.7	13.7	15.7	15.7	17.5	17.5
	Rows Deep	2	2	2	2	2	2
	Fin / Inches	20	20	20	20	20	20
Liquid Line Set OD (Field Installed)		3/8	3/8	3/8	3/8	3/8	3/8
Vapor Line Set OD (Field Installed)		3/4	3/4	3/4	3/4	7/8	7/8
Unit Charge (Lbs. - Oz.)		8lbs,3oz	9lbs,4oz	9lbs,4oz	9lbs,11oz	9lbs,4oz	10lbs,13oz
Charge Per Foot, Oz/ft.		0.6	0.6	0.6	0.6	0.6	0.6

MODEL		MOVA-60CN1-M14	MOVA-60HN1-M14				
Unit Supply Voltage		208/230V,60HZ,1Ph					
Normal Voltage Range		187~ 253V					
Max Circuit Ampacity		35.5	35.2				
Max. Overcurrent Device Amps		34	34				
Min. Overcurrent Device Amps		60	60				
Compressor Type		Scroll	Scroll				
Compressor	Rated Load Amps	21.8	21.8				
	Locked Rotor Amps	134	134				
Crankcase Heater			30				
Fan Motor Amps	Rated Load	1.67	1.67				
Fan Diameter Inches		23-5/8	23-5/8				
Fan Motor	Rated HP	1/3	1/3				
	Nominal RPM	1075	1075				
	Nominal CFM	4269	4269				
Coil	Face Area Sq.	18.6	18.6				
	Rows Deep	2	2				
	Fin / Inches	20	20				
Liquid Line Set OD (Field Installed)		3/8	3/8				
Vapor Line Set OD (Field Installed)		7/8	7/8				
Unit Charge (Lbs. - Oz.)		10lbs,13oz	10lbs,14oz				
Charge Per Foot, Oz/ft.		0.6	0.6				

three phase units :

MODEL		MOVB-36CN1-X14	MOVB-36HN1-X14	MOVB-48CN1-X14	MOVB-48HN1-X14	MOVB-60CN1-X14	MOVB-60HN1-X14
Unit Supply Voltage		208/230V,60HZ,3Ph					
Normal Voltage Range		187~ 253V					
Max Current		13	13.5	17.3	17.5	19.6	19.3
Max. Overcurrent Device Amps		20	20	30	30	35	35
Min. Overcurrent Device Amps		14	14	18.9	18.9	21.7	21.7
Compressor Type		Scroll	Scroll	Scroll	Scroll	Scroll	Scroll
Compressor	Rated Load Amps	10.4	10.4	13.7	13.7	16	16
	Locked Rotor Amps	73	73	83.1	83.1	110	110
Crankcase Heater		/	/	/	/	/	/
Fan Motor Amps	Rated Load	0.96	0.96	1.67	1.67	1.67	1.67
Fan Diameter Inches		23-5/8	23-5/8	23	23	23-5/8	23-5/8
Fan Motor	Rated HP	1/6	1/6	1/3	1/3	1/3	1/3
	Nominal RPM	825	825	1075	1075	1075	1075
	Nominal CFM	324 6	3246	4034	4034	4269	4269
Coil	Face Area Sq. Ft.	13.7	13.7	17.5	17.5	18.6	18.6
	Rows Deep	2	2	2	2	2	2
	Fin / Inches	20	20	20	20	20	20
Liquid Line Set OD (Field Installed)		3/8	3/8	3/8	3/8	3/8	3/8
Vapor Line Set OD (Field Installed)		3/4	3/4	7/8	7/8	7/8	7/8
Unit Charge (Lbs. - Oz.)		8lbs,6oz	9lbs	9lbs,14oz	10lbs,2oz	9lbs,4oz	11lbs,4oz
Charge Per Foot, Oz/ft.		0.6	0.6	0.6	0.6	0.6	0.6

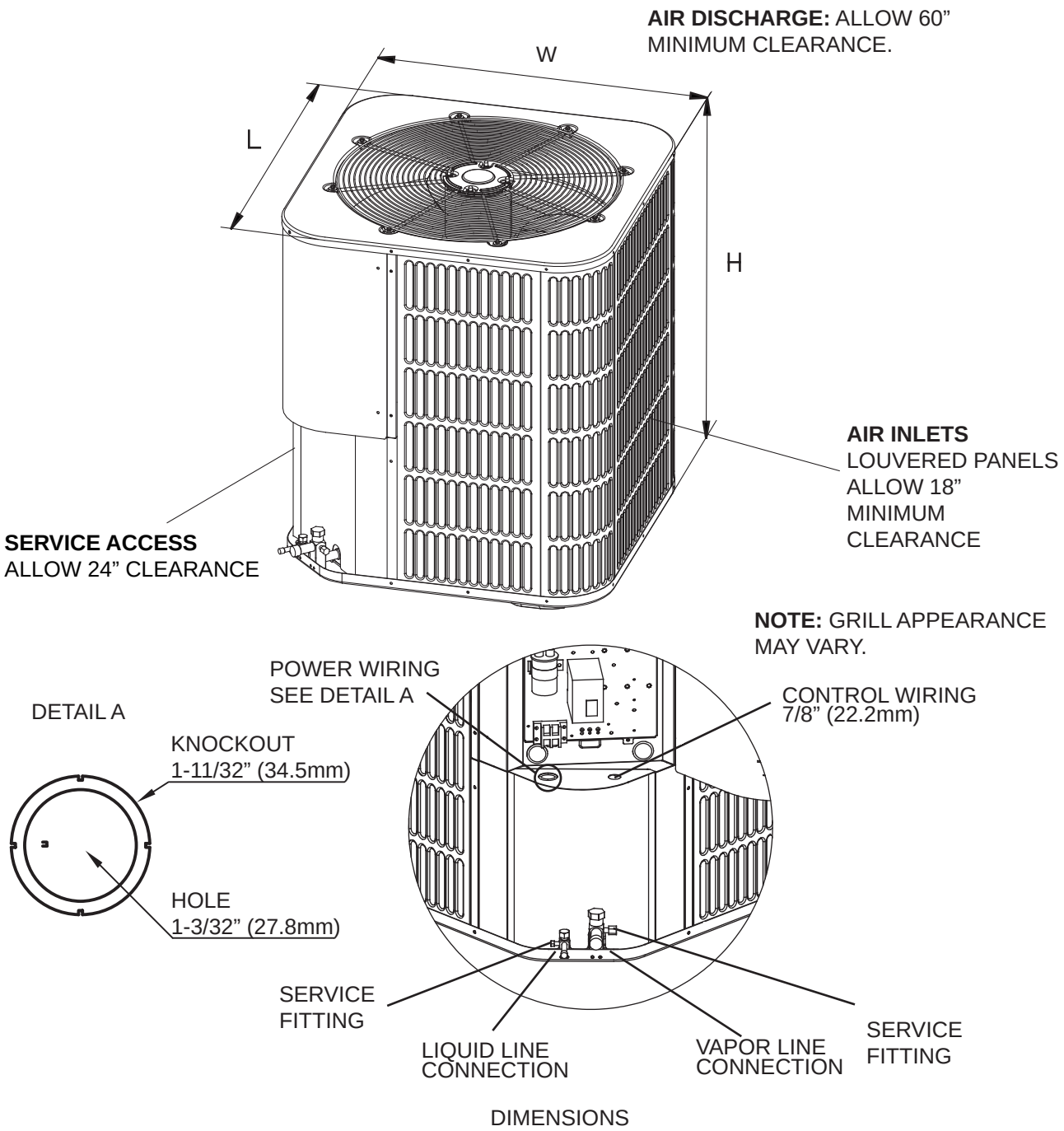

DIMENSIONS

DIMENSIONAL DATA

Unit Model (Btu/h)	Dimensions (Inches)			Refrigerant Connection Service Valve Size	
	"H" in	"W" in	"L" in	Liquid in	Vapor in
18(cooling unit)	24-15/16	21-7/8	21-7/8	3/8	3/4
18(heat pump unit)	24-15/16	23-5/8	23-5/8	3/8	3/4
24	24-15/16	23-5/8	23-5/8	3/8	3/4
30	24-15/16	28	28	3/8	3/4
36	24-15/16	29-1/8	29-1/8	3/8	3/4
42	29-7/8	28	28	3/8	3/4
48	33-3/16	28	28	3/8	7/8
60	33-3/16	29-1/8	29-1/8	3/8	7/8

Capacity - With Air Handler Coils

UNT MODEL	AIRHANDLER MODEL	CFM	CAPACITY(MBH)			
			COOLING MBH	*SEER*	*HEATING* MBH	*HSPF*
MOVA-18CN1-M14T	MVA-18HWN1-M13	622	17.5	14		
MOVA-18HN1-M14T	MVA-18HWN1-M13	622	18	14	18	7.8
MOVA-24CN1-M14T	MVA-24HWN1-M13	802	23	14		
MOVA-24HN1-M14T	MVA-24HWN1-M13	802	22.4	14	22.2	7.8
MOVA-30CN1-M14T	MVA-30HWN1-M13	992	30	14		
MOVA-30HN1-M14T	MVA-30HWN1-M13	992	29.4	14	30	7.7
MOVA-18CN1-M14C	MVA-18HWN1-M13	622	18	14		
MOVA-18HN1-M14C	MVA-18HWN1-M13	622	18	14	18	7.8
MOVA-24CN1-M14C	MVA-24HWN1-M13	802	23	14		
MOVA-24HN1-M14C	MVA-24HWN1-M13	802	22.4	14	22.2	7.8
MOVA-30CN1-M14C	MVA-30HWN1-M13	992	30	14		
MOVA-30HN1-M14C	MVA-30HWN1-M13	992	29	14	30	7.7
MOVA-36CN1-M14	MVA-36HWN1-M13	1389	36	14		
MOVA-36HN1-M14	MVA- 36HWN1-M13	1389	36	14	34.6	8.3
MOVA-42CN1-M14	MVA-42HWN1-M13	1389	42	14		
MOVA-42HN1-M14	MVA-42HWN1-M13	1389	42	14	40	8.3
MOVA-48CN1-M14	MVA-48HWN1-M13	1595	48	14		
MOVA-48HN1-M14	MVA-48HWN1-M13	1595	48	14	48	8.3
MOVA-60CN1-M14	MVA-60HWN1-M13	1966	57	14		

Capacity-with air handler coils(continued)

MOVA-60HN1-M14	MVA-60HWN1-M13	1966	57	14	56	8.3
MOVB-36CN1-X14	MVA-36HWN1-M13	1389	35.4	14		
MOVB-36HN1-X14	MVA-36HWN1-M13	1389	35.4	14	35.4	8.2
MOVB-48CN1-X14	MVA-48HWN1-M13	1595	46.5	14		
MOVB-48HN1-X14	MVA-48HWN1-M13	1595	46	14	47	8.2
MOVB-60CN1-X14	MVA-60HWN1-M13	1966	57	14		
MOVB-60HN1-X14	MVA-60HWN1-M13	1966	57	14	57	8.2

Accessories

Thermostat--- Compatible thermostat controls are available through accessory sourcing.
Filter drier--- Absorbs non-condensables from the refrigerant.Recommended for all systems.

Sound Power Rating

UNIT MODEL	dB（A)
18	56.7
24	58.25
30	61
36	61.5
42	66
48	67
60	66

Typical Installation

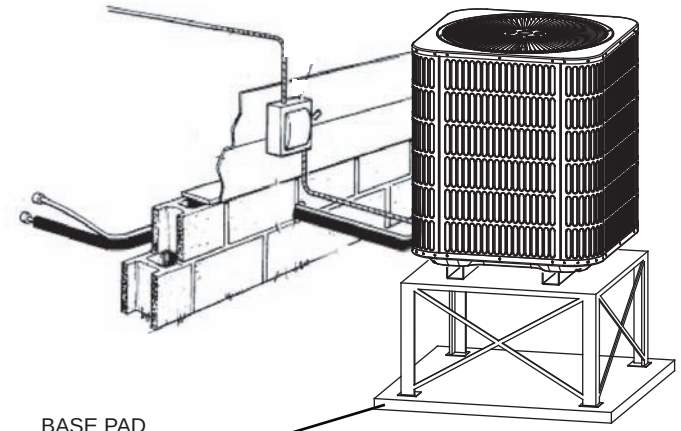

BASE PAD
(CONCRETE OR
OTHER SUITABLE
MATERIAL)

Heat pump should be installed
12" above the anticipated snow level

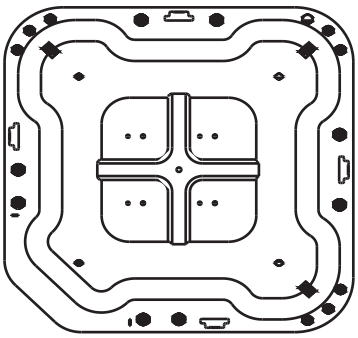

BASE PAN (BOTTOM VIEW) DO NOT
OBSTRUCT DRAIN HOLES
(SHADED)

RECOMMENDED ELEVATED INSTALLATION

Typical Field Wiring and Wiring diagram

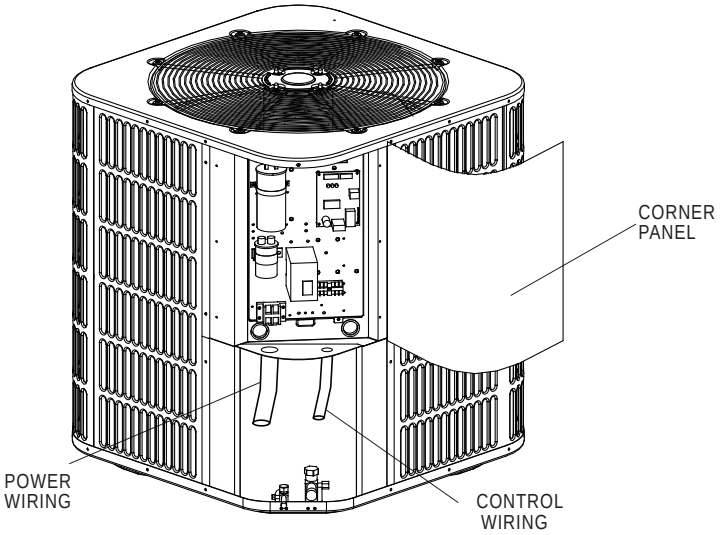

Typical Field Wiring

CC COMPRESSOR CONTACTOR
COMP COMPRESSOR
RC 1 RUN CAPACITOR 1
RC 2 RUN CAPACITOR 2

LINE VOLTAGE
FACTORY STANDARD
FIELD INSTALLED
FACTORY OPTIONAL

LOW VOLTAGE
FACTORY STANDARD
FIELD INSTALLED
FACTORY OPTIONAL
USE COPPER CONDUCTORS ONLY

WARNING :
CABINET MUST BE PERMANMENTLY GROUNDED AND ALL WIRING TO CONFORM TO I.E.C, N.E.C, C.E.C, C.L.C, AND LOCAL CODES AS APPLICABLE REPLACEMENT WIRE MUST BE THE SAME GAUGE AND INSULATION TYPE AS ORIGINAL WIRE.

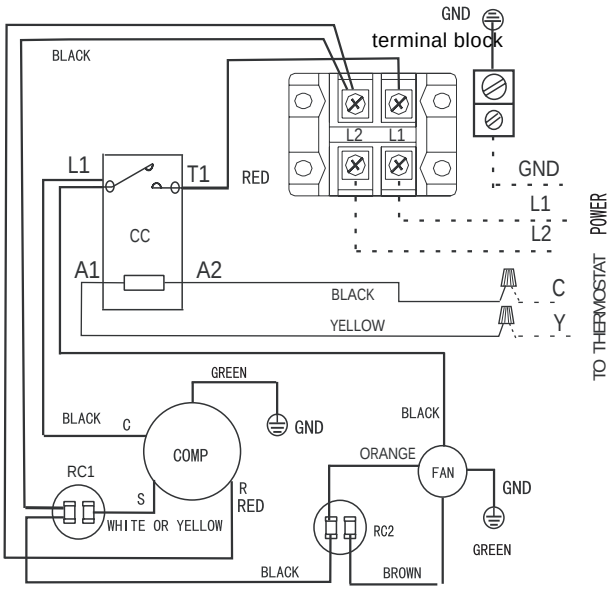

Outdoor Unit Wiring Diagram for A/C Systems(208/230V 1P 60Hz).

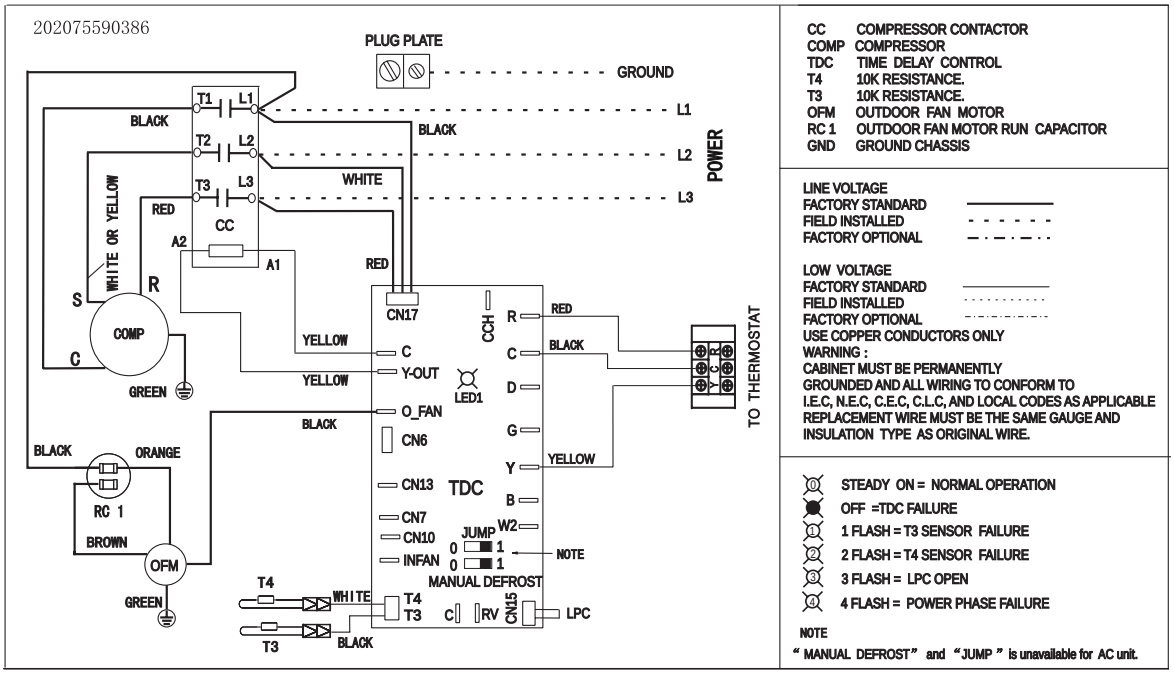

Outdoor Unit Wiring Diagram for A/C Systems(208/230V 3P 60Hz).

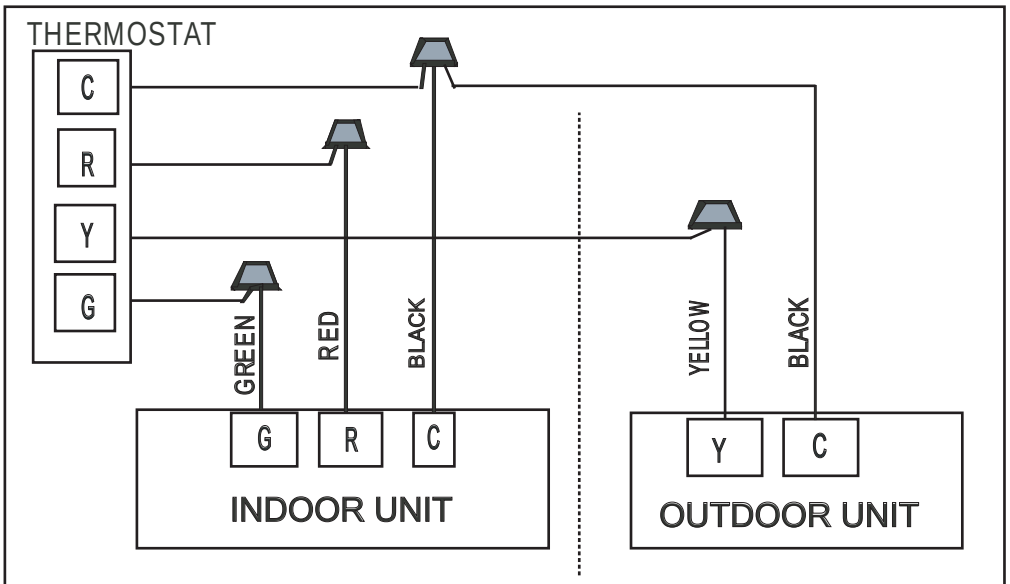

Control Wiring for A/C Systems.

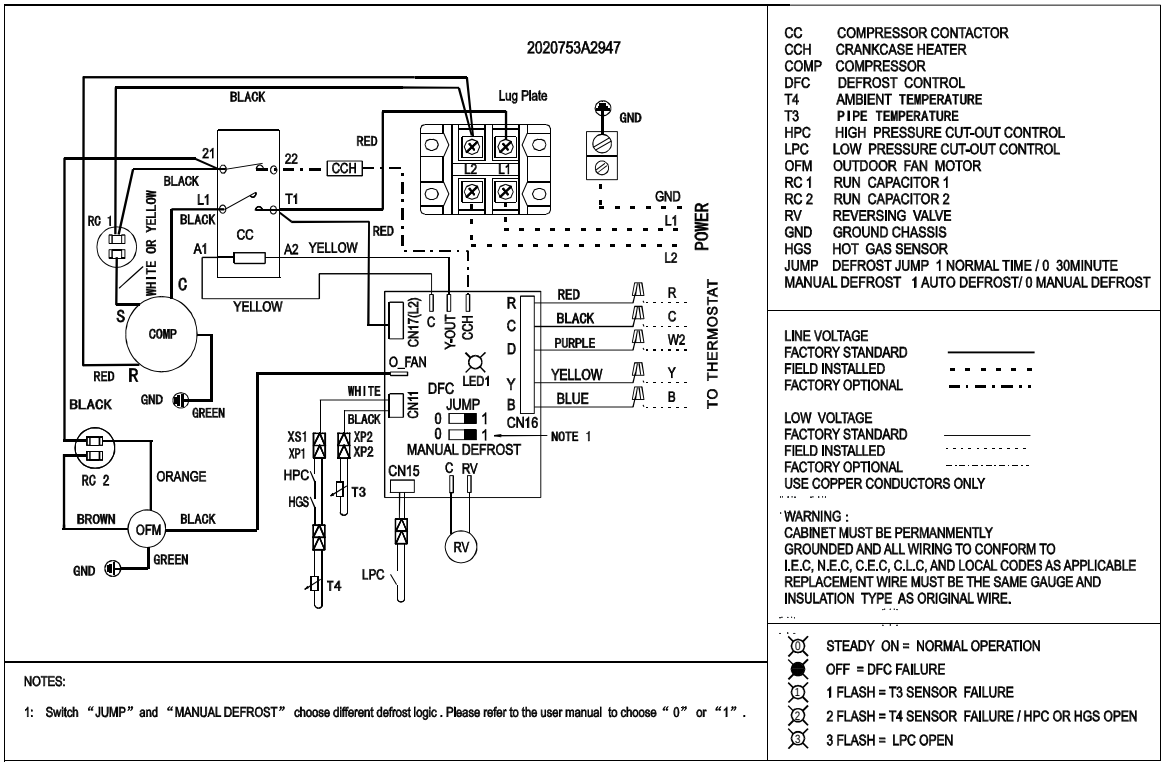

CC COMPRESSOR CONTACTOR
CCH CRANKCASE HEATER
COMP COMPRESSOR
DFC DEFROST CONTROL
T4 AMBIENT TEMPERATURE
T3 PIPE TEMPERATURE
HPC HIGH PRESSURE CUT-OUT CONTROL
LPC LOW PRESSURE CUT-OUT CONTROL
OFM OUTDOOR FAN MOTOR
RC 1 RUN CAPACITOR 1
RC 2 RUN CAPACITOR 2
RV REVERSING VALVE
GND GROUND CHASSIS
HGS HOT GAS SENSOR
JUMP DEFROST JUMP 1 NORMAL TIME / 0 30MINUTE
MANUAL DEFROST 1 AUTO DEFROST/ 0 MANUAL DEFROST

LINE VOLTAGE
FACTORY STANDARD
FIELD INSTALLED
FACTORY OPTIONAL

LOW VOLTAGE
FACTORY STANDARD
FIELD INSTALLED
FACTORY OPTIONAL
USE COPPER CONDUCTORS ONLY

WARNING :
CABINET MUST BE PERMANMENTLY GROUNDED AND ALL WIRING TO CONFORM TO I.E.C, N.E.C, C.E.C, C.L.C, AND LOCAL CODES AS APPLICABLE REPLACEMENT WIRE MUST BE THE SAME GAUGE AND INSULATION TYPE AS ORIGINAL WIRE.

STEADY ON = NORMAL OPERATION
OFF = DFC FAILURE
1 FLASH = T3 SENSOR FAILURE
2 FLASH = T4 SENSOR FAILURE / HPC OR HGS OPEN
3 FLASH = LPC OPEN

NOTES:

1: Switch "JUMP" and "MANUAL DEFROST" choose different defrost logic . Please refer to the user manual to choose " 0" or "1" .

Outdoor Unit Wiring Diagram for H/P Systems(208/230V 1P 60Hz).

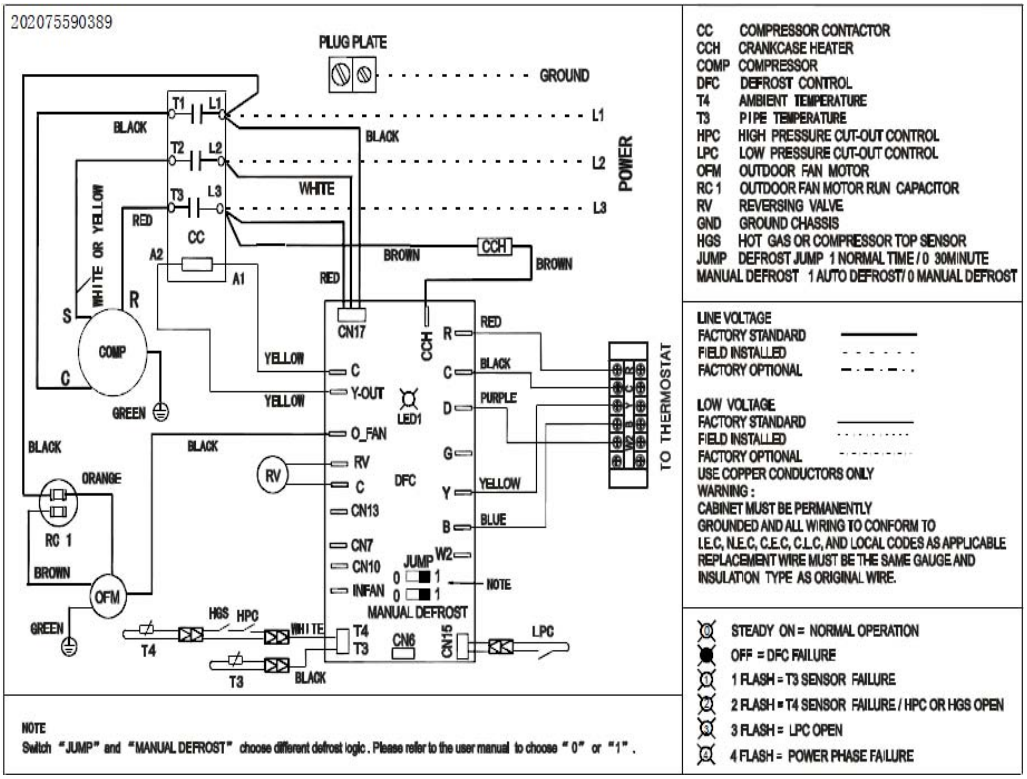

CC COMPRESSOR CONTACTOR
CCH CRANKCASE HEATER
COMP COMPRESSOR
DFC DEFROST CONTROL
T4 AMBIENT TEMPERATURE
T3 PIPE TEMPERATURE
HPC HIGH PRESSURE CUT-OUT CONTROL
LPC LOW PRESSURE CUT-OUT CONTROL
OFM OUTDOOR FAN MOTOR
RC 1 OUTDOOR FAN MOTOR RUN CAPACITOR
RV REVERSING VALVE
GND GROUND CHASSIS
HGS HOT GAS OR COMPRESSOR TOP SENSOR
JUMP DEFROST JUMP 1 NORMAL TIME / 0 30MINUTE
MANUAL DEFROST 1 AUTO DEFROST/ 0 MANUAL DEFROST

LINE VOLTAGE
FACTORY STANDARD
FIELD INSTALLED
FACTORY OPTIONAL

LOW VOLTAGE
FACTORY STANDARD
FIELD INSTALLED
FACTORY OPTIONAL
USE COPPER CONDUCTORS ONLY
WARNING :
CABINET MUST BE PERMANENTLY GROUNDED AND ALL WIRING TO CONFORM TO I.E.C, N.E.C, C.E.C, C.L.C, AND LOCAL CODES AS APPLICABLE REPLACEMENT WIRE MUST BE THE SAME GAUGE AND INSULATION TYPE AS ORIGINAL WIRE.

STEADY ON = NORMAL OPERATION
OFF = DFC FAILURE
1 FLASH = T3 SENSOR FAILURE
2 FLASH = T4 SENSOR FAILURE / HPC OR HGS OPEN
3 FLASH = LPC OPEN
4 FLASH = POWER PHASE FAILURE

NOTE
Switch "JUMP" and "MANUAL DEFROST" choose different defrost logic . Please refer to the user manual to choose " 0" or "1" .

Outdoor Unit Wiring Diagram for H/P Systems(208/230V 3P 60Hz).

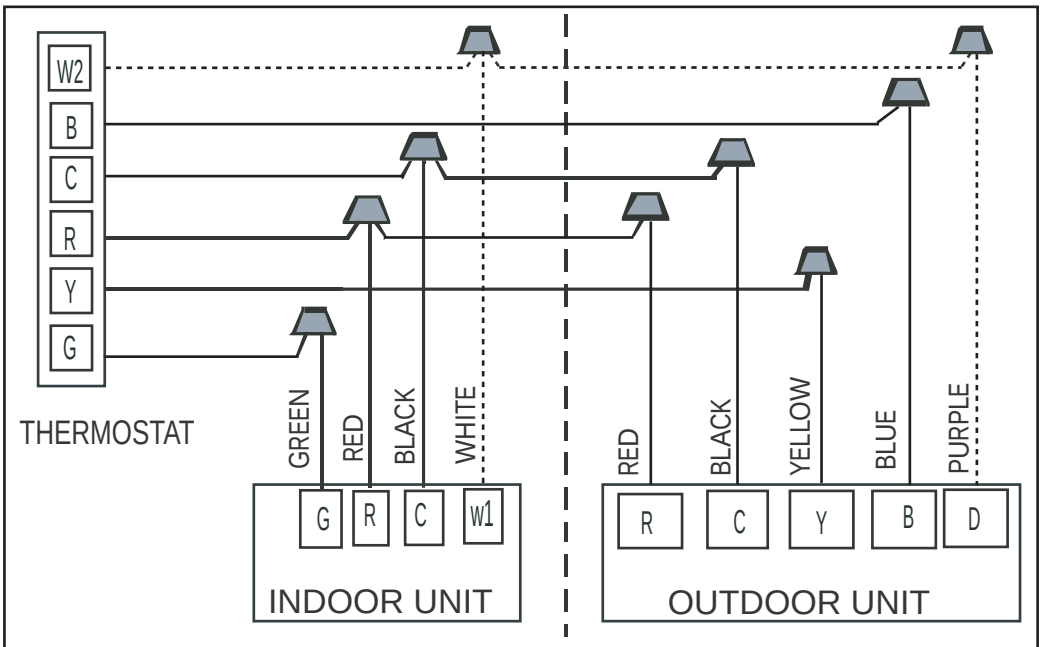

Control Wiring for H/P Systems.

Electrical Data:

Model	Min. Circuit Ampacity(A)	Maximum Circuit Protector(A)
18AC/T	9.0	15
24AC/T	11.6	20
30AC/T	16.0	25
36AC	21.9	35
42AC	24.1	40
48AC	29.0	50
60AC	34.7	60
18AC/C	11.9	20
24AC/C	17.5	30
30AC/C	18.7	30
18HP/T	9.4	15
24HP/T	11.6	20
30HP/T	16.0	25
36HP	21.9	35
42HP	24.1	40
48HP	29.0	50
60HP	34.7	60
18HP/C	11.9	20
24HP/C	17.5	30
30HP/C	18.7	30

Electrical Data:

Model	Min. Circuit Ampacity(A)	Maximum Circuit Protector(A)
36AC-3	14.0	20
48AC-3	18.9	30
60AC-3	21.7	35
36HP-3	14.0	20
48HP-3	18.9	30
60HP-3	21.7	35

NOTES: 1.AC:Air Conditioner; HP:Heat Pump
2.T:Toshiba Compressor; C:Copeland Compressor