GREE
Change for Life

Service Manual

GREE ELECTRIC APPLIANCES,INC.OF ZHUHAI

Table of Contents

Part Ⅰ:Technical Information

1. Summary

Models:

GAA07AB-D3RNB2A(CC060001800, CC060001803, CC060001805)
GAA09AB-D3RNB2A(CC060002000, CC060002003, CC060002005, CC060002007, CC060002008)
GAA12AB-D3RNB2A(CC060002200, CC060002203, CC060002205)
GAA15AB-D3RNB2A(CC060021500, CC060021501)
GAA12AB-D3RNB2B(CC060002400, CC060002403, CC060002405)
GAA15AB-D3RNB2B(CC060002600, CC060002603, CC060002605)
GAE07AB-D3RNB2A(CC060001700, CC060001703, CC060001705)
GAE09AB-D3RNB2A(CC060001900, CC060001903, CC060001905)
GAE12AB-D3RNB2A(CC060002100, CC060002103, CC060002105)
GAE15AB-D3RNB2A(CC060021400, CC060021401)
GAE12AB-D3RNB2B(CC060002300, CC060002303, CC060002305)
GAE15AB-D3RNB2B(CC060002500, CC060002503, CC060002505)
GAE07AB-D3RNB3A(CC060024000)
GAA07AB-D3RNB3A(CC060024100)
GAA15AB-D3RNB3B(CC060024200)

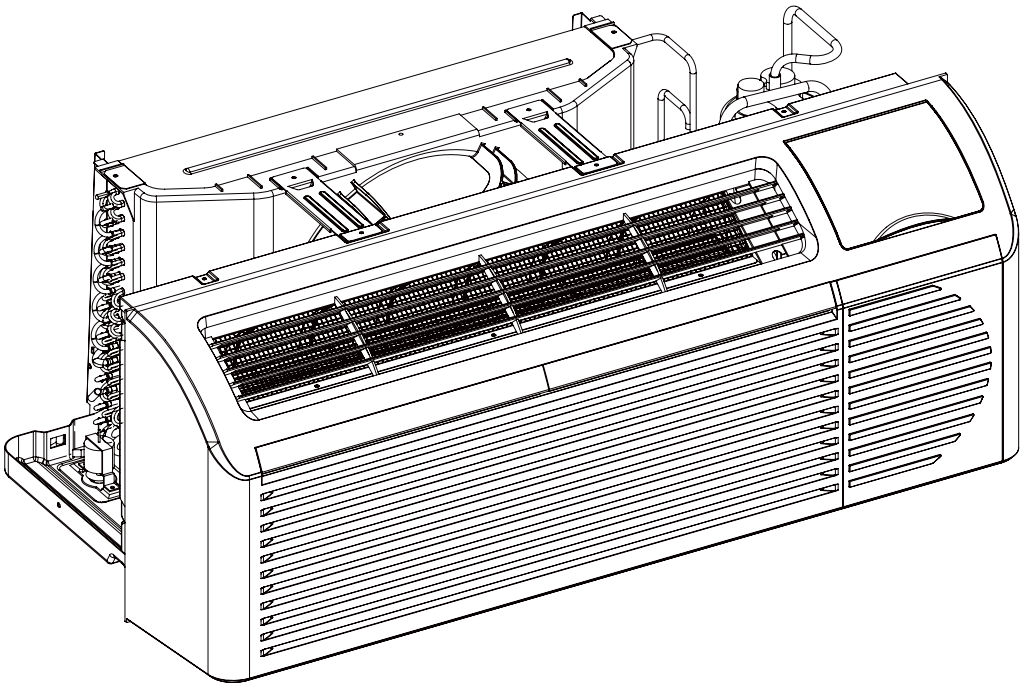

Models:

GAA07AB-D3RNB2A(CC060001801)
GAA09AB-D3RNB2A(CC060002001)
GAA12AB-D3RNB2A(CC060002201, CC060002206)
GAA12AB-D3RNB2B(CC060002401)
GAA15AB-D3RNB2B(CC060002601)
GAE07AB-D3RNB2A(CC060001701)
GAE09AB-D3RNB2A(CC060001901)
GAE12AB-D3RNB2A(CC060002101)
GAE12AB-D3RNB2B(CC060002301)
GAE15AB-D3RNB2B(CC060002501)

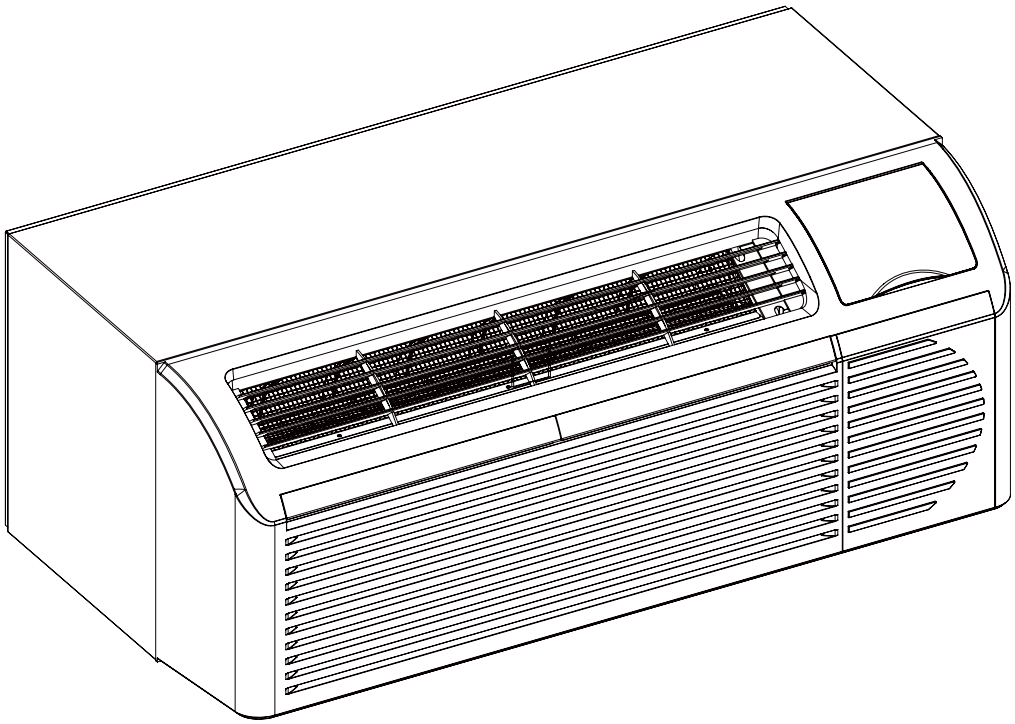

Models:

GAA09AB-D3RNA1A(CC060027600)
GAA15AB-D3RNA1B(CC060027700)
GAA07AB-D3RNB2A(CC060001802)
GAA09AB-D3RNB2A(CC060002002)
GAA12AB-D3RNB2A(CC060002202)
GAA12AB-D3RNB2B(CC060002402)
GAA15AB-D3RNB2B(CC060002602)
GAE07AB-D3RNB2A(CC060001702)
GAE09AB-D3RNB2A(CC060001902)
GAE12AB-D3RNB2A(CC060002102)
GAE12AB-D3RNB2B(CC060002302)
GAE15AB-D3RNB2B(CC060002502)

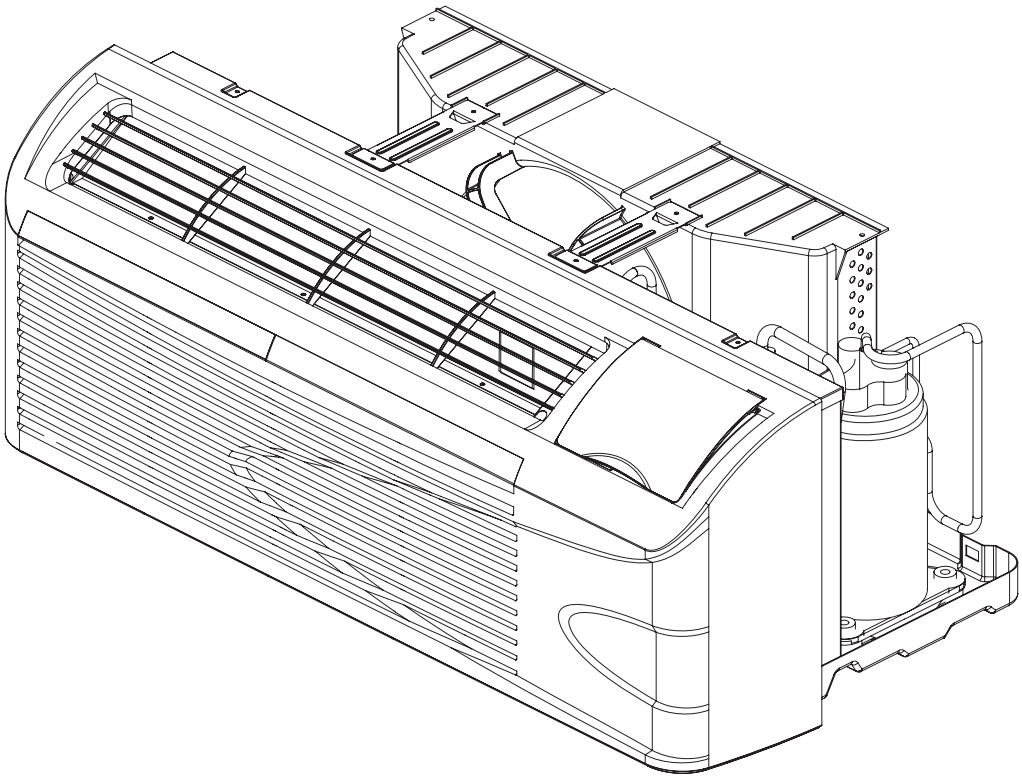

2. Specifications

Parameter		Unit	Value	
Model			GAE07AB-D3RNB2A	GAA07AB-D3RNB2A
Product Code			CC060001700 CC060001702 CC060001705	CC060001800 CC060001802 CC060001805
Power Supply	Rated Voltage	V~	208/230	208/230
	Rated Frequency	Hz	60	60
	Phases		1	1
Cooling Capacity		Btu/h	7600/7700	7600/7700
Heating Capacity		Btu/h	/	6100/6300
Cooling Power Input		W	620/640	655/665
Heating Power Input		W	/	540/560
Cooling Power Current		A	3.0/2.8	3.0/2.8
Heating Power Current		A	/	2.5/2.4
Electric Heating Power Input		W	2452/3000	2452/3000
Electric Heating Power Current		A	12.2/13.2	12.2/13.2
Rated Input		W	736	736
Rated Current		A	3	3
Air Flow Volume(H/M/L)		m^3/h	500/470/440	500/470/440
Dehumidifying Volume		L/h	0.8	0.8
EER		Btu/w.h	12.2/12	11.6/11.6
COP		Btu/w.h	/	11.3/11.3
Application Area		m^2	10-16	10-16
Climate Type			T1	T1
Isolation			I	I
Moisture Protection			IP24	IP24
Permissible Excessive Operating Pressure for the Discharge Side		MPa	3.8	3.8
Permissible Excessive Operating Pressure for the Suction Side		MPa	2	2
Dimension (WXHXD)		mm	1069X406X546	1069X406X546
Dimension of Carton Box (LXWXH)		mm	1144X645X454	1144X645X454
Dimension of Package (LXWXH)		mm	1147X648X469	1147X648X469
Net Weight		kg	46	46
Gross Weight		kg	57	57
Refrigerant			R410A	R410A
Refrigerant Charge		kg	0.51	0.58
Indoor Side	Fan Type		Cross-flow	Cross-flow
	Diameter Length(DXL)	mm	Φ121X706	Φ121X706
	Fan Motor Speed(H/M/L)	r/min	840/790/740	1030/970/890
	Output of Fan Motor	W	18	21
	Fan Motor RLA	A	0.15	0.36
	Fan Motor Capacitor	μF	1	1
	Input of Heater	W	2452/3000	2452/3000
	Evaporator Form		Alumium Tube	Alumium Tube
	Pipe Diameter	mm	Φ7.94	Φ7.94
	Row-fin Gap	mm	2-1.4	2-1.4
	Coil Length (LXDXW)	mm	698X38.1X242	698X38.1X242
	Swing Motor Model		/	/
	Output of Swing Motor	W	/	/
	Fuse	A	3.15	3.15
	Sound Pressure Level (H/M/L)	dB (A)	49/48/47	51/50/49
	Sound Power Level (H/M/L)	dB (A)	59/58/57	61/60/59

Outdoor Side	Compressor Manufacturer/ Trademark		PANASONIC WANBAO COMPRESSOR (GUANGZHOU) CO.,LTD	PANASONIC WANBAO COMPRESSOR (GUANGZHOU) CO.,LTD
	Compressor Model		5RS062FAA21	5RS062FAA21
	Compressor Oil		FV50S	FV50S
	Compressor Type		Rotary	Rotary
	L.R.A.	A	19	19
	Compressor RLA	A	2.8	2.8
	Compressor Power Input	W	630	630
	Overload Protector		B130-140-241E	B130-140-241E
	Throttling Method		Capillary	Capillary
	Operation Temp	ºC	16~30	16~30
	Ambient Temp (Cooling)	ºC	13~46	13~46
	Ambient Temp (Heating)	ºC	≤24	≤24
	Condenser Form		Aluminum Fin-copper Tube	Aluminum Fin-copper Tube
	Pipe Diameter	mm	Φ5	Φ5
	Rows-fin Gap	mm	2-1.3	2-1.3
	Coil Length (LXDXW)	mm	635X22.8X343	635X22.8X343
	Fan Motor Speed	rpm	1370	1370
	Output of Fan Motor	W	40	40
	Fan Motor RLA	A	0.42	0.42
	Fan Motor Capacitor	μF	2	2
	Air Flow Volume of Outdoor Side	m^3/h	/	/
	Fan Type		Axial-flow	Axial-flow
	Fan Diameter	mm	Φ349	Φ349
	Sound Pressure Level (H/M/L)	dB (A)	61/59/57	61/59/57
	Sound Power Level (H/M/L)	dB (A)	71/69/67	71/69/67
	Defrosting Method		/	/

The above data is subject to change without notice. Please refer to the nameplate of the unit.

Parameter		Unit	Value	
Model			GAE09AB-D3RNB2A	GAA09AB-D3RNB2A
Product Code			CC060001900 CC060001902 CC060001905	CC060002000 CC060002002 CC060002005
Power Supply	Rated Voltage	V~	208/230	208/230
	Rated Frequency	Hz	60	60
	Phases		1	1
Cooling Capacity		Btu/h	8800/9000	8800/9000
Heating Capacity		Btu/h	/	7900/8100
Cooling Power Input		W	770/800	770/800
Heating Power Input		W	/	700/720
Cooling Power Current		A	3.9/3.7	3.9/3.7
Heating Power Current		A	/	3.8/3.4
Electric Heating Power Input		W	2452/3000	2452/3000
Electric Heating Power Current		A	12.2/13.2	12.2/13.2
Rated Input		W	893	972
Rated Current		A	4.78	5.36
Air Flow Volume(H/M/L)		m^3/h	500/470/440	530/500/470
Dehumidifying Volume		L/h	1	1
EER		Btu/w.h	11.4/11.3	11.4/11.3
COP		Btu/w.h	/	11.3/11.3
Application Area		m^2	12-18	12-18
Climate Type			T1	T1
Isolation			I	I
Moisture Protection			IP24	IP24
Permissible Excessive Operating Pressure for the Discharge Side		MPa	3.8	3.8
Permissible Excessive Operating Pressure for the Suction Side		MPa	2	2
Dimension (WXHXD)		mm	1069X406X546	1069X406X546
Dimension of Carton Box (LXWXH)		mm	1144X645X454	1144X645X454
Dimension of Package (LXWXH)		mm	1147X648X469	1147X648X469
Net Weight		kg	47	48
Gross Weight		kg	58	59
Refrigerant			R410A	R410A
Refrigerant Charge		kg	0.61	0.71
Indoor Side	Fan Type		Cross-flow	Cross-flow
	Diameter Length(DXL)	mm	Φ121X706	Φ121X706
	Fan Motor Speed(H/M/L)	r/min	1030/970/890	1030/970/890
	Output of Fan Motor	W	21	21
	Fan Motor RLA	A	0.36	0.36
	Fan Motor Capacitor	μF	1	1
	Input of Heater	W	2452/3000	2452/3000
	Evaporator Form		Aluminum Fin-copper Tube	Aluminum Fin-copper Tube
	Pipe Diameter	mm	Φ7	Φ7.94
	Row-fin Gap	mm	2-1.4	2-1.4
	Coil Length (LXDXW)	mm	699X25.4X248	699X38.1X242
	Swing Motor Model		/	/
	Output of Swing Motor	W	/	/
	Fuse	A	3.15	3.15
	Sound Pressure Level (H/M/L)	dB (A)	51/50/49	51/50/49
	Sound Power Level (H/M/L)	dB (A)	61/60/59	61/60/59

Outdoor Side	Compressor Manufacturer/ Trademark		MITSUBISHI ELECTRIC (GUANGZHOU) COMPRESSOR CO.,LTD	MITSUBISHI ELECTRIC (GUANGZHOU) COMPRESSOR CO.,LTD
	Compressor Model		KN073NGFMC	KN073NGFMC
	Compressor Oil		PVE	PVE
	Compressor Type		Rotary	Rotary
	L.R.A.	A	17	17
	Compressor RLA	A	3.7	3.7
	Compressor Power Input	W	740	740
	Overload Protector		/	/
	Throttling Method		Capillary	Capillary
	Operation Temp	ºC	16~30	16~30
	Ambient Temp (Cooling)	ºC	13~46	13~46
	Ambient Temp (Heating)	ºC	≤24	≤24
	Condenser Form		Aluminum Fin-copper Tube	Aluminum Fin-copper Tube
	Pipe Diameter	mm	Φ5	Φ5
	Rows-fin Gap	mm	3-1.4	3-1.4
	Coil Length (LXDXW)	mm	635X34.2X343	635X34.2X343
	Fan Motor Speed	rpm	1370	1370
	Output of Fan Motor	W	40	40
	Fan Motor RLA	A	0.42	0.42
	Fan Motor Capacitor	μF	2	2
	Air Flow Volume of Outdoor Side	m^3/h	/	/
	Fan Type		Axial-flow	Axial-flow
	Fan Diameter	mm	Φ349	Φ349
	Sound Pressure Level (H/M/L)	dB (A)	61/59/57	61/59/57
	Sound Power Level (H/M/L)	dB (A)	71/69/67	71/69/67
	Defrosting Method		/	/

The above data is subject to change without notice. Please refer to the nameplate of the unit.

Parameter		Unit	Value
Model			GAA09AB-D3RNB2A
Product Code			CC060002007 CC060002008
Power Supply	Rated Voltage	V~	208/230
	Rated Frequency	Hz	60
	Phases		1
Cooling Capacity		Btu/h	8800/9000
Heating Capacity		Btu/h	7900/8100
Cooling Power Input		W	770/800
Heating Power Input		W	700/720
Cooling Power Current		A	3.9/3.7
Heating Power Current		A	3.8/3.4
Electric Heating Power Input		W	2452/3000
Electric Heating Power Current		A	12.2/13.2
Rated Input		W	995
Rated Current		A	5.4
Air Flow Volume(H/M/L)		m^3/h	560/530/500
Dehumidifying Volume		L/h	1
EER		Btu/w.h	11.4/11.3
COP		Btu/w.h	11.3/11.3
Application Area		m^2	12-18
Climate Type			T1
Isolation			I
Moisture Protection			IP24
Permissible Excessive Operating Pressure for the Discharge Side		MPa	4.3
Permissible Excessive Operating Pressure for the Suction Side		MPa	2.5
Dimension (WXHXD)		mm	1069X406X546
Dimension of Carton Box (LXWXH)		mm	1144X645X454
Dimension of Package (LXWXH)		mm	1147X648X469
Net Weight		kg	48
Gross Weight		kg	59
Refrigerant			R410A
Refrigerant Charge		kg	0.71
Indoor Side	Fan Type		Cross-flow
	Diameter Length(DXL)	mm	Φ121X706
	Fan Motor Speed(H/M/L)	r/min	1030/970/890
	Output of Fan Motor	W	21
	Fan Motor RLA	A	0.2
	Fan Motor Capacitor	μF	1.5
	Input of Heater	W	2452/3000
	Evaporator Form		Aluminum Fin-copper Tube
	Pipe Diameter	mm	Φ7.94
	Row-fin Gap	mm	2-1.4
	Coil Length (LXDXW)	mm	699X38.1X242
	Swing Motor Model		/
	Output of Swing Motor	W	/
	Fuse	A	3.15
	Sound Pressure Level (H/M/L)	dB (A)	54/53/52
	Sound Power Level (H/M/L)	dB (A)	64/63/62

Outdoor Side	Compressor Manufacturer/Trademark		RECHI PRECISION CO.,LTD
	Compressor Model		44A202AG&F5KC
	Compressor Oil		NMOC Ze-Gles RB68EP or equivalent
	Compressor Type		Rotary
	L.R.A.	A	21
	Compressor RLA	A	3.5
	Compressor Power Input	W	785
	Overload Protector		B180-140K-241C
	Throttling Method		Capillary
	Operation Temp	ºC	16~30
	Ambient Temp (Cooling)	ºC	13~46
	Ambient Temp (Heating)	ºC	≤24
	Condenser Form		Aluminum Fin-copper Tube
	Pipe Diameter	mm	Φ5
	Rows-fin Gap	mm	3-1.4
	Coil Length (LXDXW)	mm	635X34.2X343
	Fan Motor Speed	rpm	1370
	Output of Fan Motor	W	40
	Fan Motor RLA	A	0.35
	Fan Motor Capacitor	μF	2
	Air Flow Volume of Outdoor Side	m^3/h	/
	Fan Type		Axial-flow
	Fan Diameter	mm	Φ349
	Sound Pressure Level (H/M/L)	dB (A)	61/59/57
	Sound Power Level (H/M/L)	dB (A)	71/69/67
	Defrosting Method		/

The above data is subject to change without notice. Please refer to the nameplate of the unit.

Parameter		Unit	Value	
Model			GAE12AB-D3RNB2A	GAA12AB-D3RNB2A
Product Code			CC060002100 CC060002102 CC060002105	CC060002200 CC060002202 CC060002205
Power Supply	Rated Voltage	V~	208/230	208/230
	Rated Frequency	Hz	60	60
	Phases		1	1
Cooling Capacity		Btu/h	11800/12000	11800/12000
Heating Capacity		Btu/h	/	10500/10700
Cooling Power Input		W	1120/1120	1120/1120
Heating Power Input		W	/	990/1010
Cooling Power Current		A	5.3/5.1	5.3/5.1
Heating Power Current		A	/	4.7/4.5
Electric Heating Power Input		W	2452/3000	2452/3000
Electric Heating Power Current		A	12.2/13.2	12.2/13.2
Rated Input		W	1394	1447
Rated Current		A	7.57	7.87
Air Flow Volume(H/M/L)		m^3/h	530/500/470	530/500/470
Dehumidifying Volume		L/h	1.3	1.3
EER		Btu/w.h	10.5/10.7	10.5/10.7
COP		Btu/w.h	/	10.6/10.6
Application Area		m^2	16-24	16-24
Climate Type			T1	T1
Isolation			I	I
Moisture Protection			IP24	IP24
Permissible Excessive Operating Pressure for the Discharge Side		MPa	3.8	3.8
Permissible Excessive Operating Pressure for the Suction Side		MPa	2	2
Dimension (WXHXD)		mm	1069X406X546	1069X406X546
Dimension of Carton Box (LXWXH)		mm	1144X645X454	1144X645X454
Dimension of Package (LXWXH)		mm	1147X648X469	1147X648X469
Net Weight		kg	49	50
Gross Weight		kg	60	61
Refrigerant			R410A	R410A
Refrigerant Charge		kg	0.76	0.76
Indoor Side	Fan Type		Cross-flow	Cross-flow
	Diameter Length(DXL)	mm	Φ121X706	Φ121X706
	Fan Motor Speed(H/M/L)	r/min	1100/1000/920	1100/1000/920
	Output of Fan Motor	W	23	23
	Fan Motor RLA	A	0.36	0.36
	Fan Motor Capacitor	μF	1	1
	Input of Heater	W	2452/3000	2452/3000
	Evaporator Form		Aluminum Fin-copper Tube	Aluminum Fin-copper Tube
	Pipe Diameter	mm	Φ7	Φ7
	Row-fin Gap	mm	3-1.4	3-1.4
	Coil Length (LXDXW)	mm	698X38.1X242	698X38.1X242
	Swing Motor Model		/	/
	Output of Swing Motor	W	/	/
	Fuse	A	3.15	3.15
	Sound Pressure Level (H/M/L)	dB (A)	53/52/51	53/52/51
	Sound Power Level (H/M/L)	dB (A)	63/62/61	63/62/61

Outdoor Side	Compressor Manufacturer/ Trademark		RECHI PRECISION CO.,LTD	RECHI PRECISION CO.,LTD
	Compressor Model		44A282AK&FEKC	44A282AK&FEKC
	Compressor Oil		NMOC Ze-Gles RB68EP	NMOC Ze-Gles RB68EP
	Compressor Type		Rotary	Rotary
	L.R.A.	A	29.5	29.5
	Compressor RLA	A	5	5
	Compressor Power Input	W	1125	1125
	Overload Protector		B245-140K-141H	B245-140K-141H
	Throttling Method		Capillary	Capillary
	Operation Temp	ºC	16~30	16~30
	Ambient Temp (Cooling)	ºC	13~46	13~46
	Ambient Temp (Heating)	ºC	≤24	≤24
	Condenser Form		Aluminum Fin-copper Tube	Aluminum Fin-copper Tube
	Pipe Diameter	mm	Φ5	Φ5
	Rows-fin Gap	mm	3-1.4	3-1.4
	Coil Length (LXDXW)	mm	635X34.2X343	635X34.2X343
	Fan Motor Speed	rpm	1370	1370
	Output of Fan Motor	W	65	65
	Fan Motor RLA	A	0.67	0.67
	Fan Motor Capacitor	μF	2.5	2.5
	Air Flow Volume of Outdoor Side	m^3/h	/	/
	Fan Type		Axial-flow	Axial-flow
	Fan Diameter	mm	Φ349	Φ349
	Sound Pressure Level (H/M/L)	dB (A)	63/61/59	63/61/59
	Sound Power Level (H/M/L)	dB (A)	73/71/59	73/71/59
	Defrosting Method		/	/

The above data is subject to change without notice. Please refer to the nameplate of the unit.

Model			GAE15AB-D3RNB2A	GAA15AB-D3RNB2A
Product Code			CC060021400 CC060021401	CC060021500 CC060021501
Power Supply	Rated Voltage	V~	208/230	230
	Rated Frequency	Hz	60	60
	Phases		1	1
Cooling Capacity		Btu/h	14600/15000	15000
Heating Capacity		Btu/h	/	13800
Cooling Power Input		W	1510/1530	1530
Heating Power Input		W	/	1390
Cooling Current Input		A	7.5/6.7	6.7
Heating Current Input		A	/	6
Rated Input		W	2025	2025
Rated Current		A	11.03	11.03
Air Flow Volume(H/M/L)		m^3/h	580/550/520	580/550/520
Dehumidifying Volume		L/h	1.5	1.5
EER		Btu/w.h	9.7/9.8	9.8
COP		Btu/w.h	/	9.9
Application Area		m^2	21-31	21-31
Climate Type			T1	T1
Isolation			I	I
Moisture Protection			IP24	IP24
Permissible Excessive Operating Pressure for the Discharge Side		MPa	4.3	4.3
Permissible Excessive Operating Pressure for the Suction Side		MPa	2.5	2.5
Dimension (WXHXD)		mm	1069X406X546	1069X406X546
Dimension of Carton Box (LXWXH)		mm	1144X645X454	1144X645X454
Dimension of Package (LXWXH)		mm	1147X648X469	1147X648X469
Net Weight		kg	53	54
Gross Weight		kg	64	65
Refrigerant			R410A	R410A
Refrigerant Charge		kg	1.08	1.08
Indoor Side	Fan Type		Cross-flow	Cross-flow
	Fan Diameter Length(D×L)	mm	Φ121X706	Φ121X706
	Cooling Speed	r/min	1100/1000/920	1100/1000/920
	Heating Speed	r/min	1100/1000/920	1100/1000/920
	Fan Motor Power Output	W	23	23
	Fan Motor RLA	A	0.36	0.36
	Fan Motor Capacitor	μF	1	1
	Electric Heating Power Input	W	2452/3000	3000
	Evaporator Form		Aluminum Fin-copper Tube	Aluminum Fin-copper Tube
	Evaporator Pipe Diameter	mm	Φ7	Φ7
	Evaporator Row-fin Gap	mm	3-1.4	3-1.4
	Evaporator Coil Length (LXDXW)	mm	699X38.1X248	699X38.1X248
	Swing Motor Model		/	/
	Swing Motor Power Output	W	/	/
	Fuse Current	A	3.15	3.15
	Sound Pressure Level (H/M/L)	dB (A)	53/52/51	53/52/51
	Sound Power Level (H/M/L)	dB (A)	63/62/61	63/62/61

Outdoor Side	Compressor Manufacturer		PANASONIC WANBAO COMPRESSOR (GUANGZHOU) CO.,LTD	PANASONIC WANBAO COMPRESSOR (GUANGZHOU) CO.,LTD
	Compressor Model		5PS146FAA21	5PS146FAA21
	Compressor Oil		FV50S	FV50S
	Compressor Type		Rotary	Rotary
	Compressor LRA.	A	32.6	32.6
	Compressor RLA	A	6.6	6.6
	Compressor Power Input	W	1480	1480
	Compressor Overload Protector		B205-150-141C	B205-150-141C
	Throttling Method		Capillary	Capillary
	Set Temperature Range	ºC	16~30	16~30
	Cooling Operation Ambient Temperature Range	ºC	13~46	13~46
	Heating Operation Ambient Temperature Range	ºC	≤24	≤24
	Condenser Form		Aluminum Fin-copper Tube	Aluminum Fin-copper Tube
	Condenser Pipe Diameter	mm	Φ7.94	Φ7.94
	Condenser Rows-fin Gap	mm	3-1.4	3-1.4
	Condenser Coil Length (LXDXW)	mm	635X57.2X352	635X57.2X352
	Fan Motor Speed	rpm	1370	1370
	Fan Motor Power Output	W	65	65
	Fan Motor RLA	A	0.77	0.77
	Fan Motor Capacitor	μF	2.5	2.5
	Outdoor Unit Air Flow Volume	m^3/h	1000	1000
	Fan Type		Axial-flow	Axial-flow
	Fan Diameter	mm	Φ349	Φ349
	Sound Pressure Level (H/M/L)	dB (A)	63/61/59	63/61/59
	Sound Power Level (H/M/L)	dB (A)	73/71/69	73/71/69
	Defrosting Method		/	/

The above data is subject to change without notice. Please refer to the nameplate of the unit.

Parameter		Unit	Value	
Model			GAE12AB-D3RNB2B	GAA12AB-D3RNB2B
Product Code			CC060002300 CC060002302 CC060002305	CC060002400 CC060002402 CC060002405
Power Supply	Rated Voltage	V~	208/230	208/230
	Rated Frequency	Hz	60	60
	Phases		1	1
Cooling Capacity		Btu/h	11800/12000	11800/12000
Heating Capacity		Btu/h	/	10500/10700
Cooling Power Input		W	1120/1120	1120/1120
Heating Power Input		W	/	990/1010
Cooling Power Current		A	5.3/5.1	5.3/5.1
Heating Power Current		A	/	4.7/4.5
Electric Heating Power Input		W	4087/5000	4087/5000
Electric Heating Power Current		A	20.5/21.5	20.5/21.5
Rated Input		W	1394	1447
Rated Current		A	7.57	7.87
Air Flow Volume(H/M/L)		m^3/h	530/500/470	530/500/470
Dehumidifying Volume		L/h	1.3	1.3
EER		Btu/w.h	10.5/10.7	10.5/10.7
COP		Btu/w.h	/	10.6/10.6
Application Area		m^2	16-24	16-24
Climate Type			T1	T1
Isolation			I	I
Moisture Protection			IP24	IP24
Permissible Excessive Operating Pressure for the Discharge Side		MPa	3.8	3.8
Permissible Excessive Operating Pressure for the Suction Side		MPa	2	2
Dimension (WXHXD)		mm	1069X406X546	1069X406X546
Dimension of Carton Box (LXWXH)		mm	1144X645X454	1144X645X454
Dimension of Package (LXWXH)		mm	1147X648X469	1147X648X469
Net Weight		kg	50	50
Gross Weight		kg	61	61
Refrigerant			R410A	R410A
Refrigerant Charge		kg	0.76	0.76
Indoor Side	Fan Type		Cross-flow	Cross-flow
	Diameter Length(DXL)	mm	Φ121X706	Φ121X706
	Fan Motor Speed(H/M/L)	r/min	1100/1000/920	1100/1000/920
	Output of Fan Motor	W	23	23
	Fan Motor RLA	A	0.36	0.36
	Fan Motor Capacitor	μF	1	1
	Input of Heater	W	4087/5000	4087/5000
	Evaporator Form		Aluminum Fin-copper Tube	Aluminum Fin-copper Tube
	Pipe Diameter	mm	Φ7	Φ7
	Row-fin Gap	mm	3-1.4	3-1.4
	Coil Length (LXDXW)	mm	698X38.1X242	698X38.1X242
	Swing Motor Model		/	/
	Output of Swing Motor	W	/	/
	Fuse	A	3.15	3.15
	Sound Pressure Level (H/M/L)	dB (A)	53/52/51	53/52/51
	Sound Power Level (H/M/L)	dB (A)	63/62/61	63/62/61

Outdoor Side	Compressor Manufacturer/ Trademark		RECHI PRECISION CO.,LTD	RECHI PRECISION CO.,LTD
	Compressor Model		44A282AK&FEKC	44A282AK&FEKC
	Compressor Oil		NMOC Ze-Gles RB68EP	NMOC Ze-Gles RB68EP
	Compressor Type		Rotary	Rotary
	L.R.A.	A	29.5	29.5
	Compressor RLA	A	5	5
	Compressor Power Input	W	1125	1125
	Overload Protector		B245-140K-141H	B245-140K-141H
	Throttling Method		Capillary	Capillary
	Operation Temp	ºC	16~30	16~30
	Ambient Temp (Cooling)	ºC	13~46	13~46
	Ambient Temp (Heating)	ºC	≤24	≤24
	Condenser Form		Aluminum Fin-copper Tube	Aluminum Fin-copper Tube
	Pipe Diameter	mm	Φ5	Φ5
	Rows-fin Gap	mm	3-1.4	3-1.4
	Coil Length (LXDXW)	mm	635X34.2X343	635X34.2X343
	Fan Motor Speed	rpm	1370	1370
	Output of Fan Motor	W	65	65
	Fan Motor RLA	A	0.67	0.67
	Fan Motor Capacitor	μF	2.5	2.5
	Air Flow Volume of Outdoor Side	m^3/h	/	/
	Fan Type		Axial-flow	Axial-flow
	Fan Diameter	mm	Φ349	Φ349
	Sound Pressure Level (H/M/L)	dB (A)	63/61/59	63/61/59
	Sound Power Level (H/M/L)	dB (A)	73/71/59	73/71/59
	Defrosting Method		/	/

The above data is subject to change without notice. Please refer to the nameplate of the unit.

Parameter		Unit	Value	
Model			GAE15AB-D3RNB2B	GAA15AB-D3RNB2B
Product Code			CC060002500 CC060002502 CC060002505	CC060002600 CC060002602 CC060002605
Power Supply	Rated Voltage	V~	208/230	230
	Rated Frequency	Hz	60	60
	Phases		1	1
Cooling Capacity		Btu/h	14600/15000	15000
Heating Capacity		Btu/h	/	13800
Cooling Power Input		W	1510/1530	1530
Heating Power Input		W	/	1390
Cooling Power Current		A	7.5/6.7	6.7
Heating Power Current		A	/	6
Electric Heating Power Input		W	4087/5000	5000
Electric Heating Power Current		A	20.5/21.5	21.5
Rated Input		W	2025	2025
Rated Current		A	11.03	11.03
Air Flow Volume(H/M/L)		m^3/h	580/550/520	580/550/520
Dehumidifying Volume		L/h	1.5	1.5
EER		Btu/w.h	9.7/9.8	9.8
COP		Btu/w.h	/	9.9
Application Area		m^2	21-31	21-31
Climate Type			T1	T1
Isolation			I	I
Moisture Protection			IP24	IP24
Permissible Excessive Operating Pressure for the Discharge Side		MPa	3.8	3.8
Permissible Excessive Operating Pressure for the Suction Side		MPa	2	2
Dimension (WXHXD)		mm	1069X406X546	1069X406X546
Dimension of Carton Box (LXWXH)		mm	1144X645X454	1144X645X454
Dimension of Package (LXWXH)		mm	1147X648X469	1147X648X469
Net Weight		kg	53	54
Gross Weight		kg	64	65
Refrigerant			R410A	R410A
Refrigerant Charge		kg	1.08	1.08
Indoor Side	Fan Type		Cross-flow	Cross-flow
	Diameter Length(DXL)	mm	Φ121X706	Φ121X706
	Fan Motor Speed(H/M/L)	r/min	1100/1000/920	1100/1000/920
	Output of Fan Motor	W	23	23
	Fan Motor RLA	A	0.36	0.36
	Fan Motor Capacitor	μF	1	1
	Input of Heater	W	4087/5000	5000
	Evaporator Form		Aluminum Fin-copper Tube	Aluminum Fin-copper Tube
	Pipe Diameter	mm	Φ7	Φ7
	Row-fin Gap	mm	3-1.4	3-1.4
	Coil Length (LXDXW)	mm	698X38.1X248	698X38.1X248
	Swing Motor Model		/	/
	Output of Swing Motor	W	/	/
	Fuse	A	3.15	3.15
	Sound Pressure Level (H/M/L)	dB (A)	53/52/51	53/52/51
	Sound Power Level (H/M/L)	dB (A)	63/62/61	63/62/61

Outdoor Side	Compressor Manufacturer/ Trademark		PANASONIC WANBAO COMPRESSOR (GUANGZHOU) CO.,LTD	PANASONIC WANBAO COMPRESSOR (GUANGZHOU) CO.,LTD
	Compressor Model		5PS146FAA21	5PS146FAA21
	Compressor Oil		FV50S	FV50S
	Compressor Type		Rotary	Rotary
	L.R.A.	A	32.6	32.6
	Compressor RLA	A	6.6	6.6
	Compressor Power Input	W	1480	1480
	Overload Protector		B205-150-141C	B205-150-141C
	Throttling Method		Capillary	Capillary
	Operation Temp	ºC	16~30	16~30
	Ambient Temp (Cooling)	ºC	13~46	13~46
	Ambient Temp (Heating)	ºC	≤24	≤24
	Condenser Form		Aluminum Fin-copper Tube	Aluminum Fin-copper Tube
	Pipe Diameter	mm	Φ7.94	Φ7.94
	Rows-fin Gap	mm	3-1.4	3-1.4
	Coil Length (LXDXW)	mm	635X57.2X352	635X57.2X352
	Fan Motor Speed	rpm	1370	1370
	Output of Fan Motor	W	65	65
	Fan Motor RLA	A	0.77	0.77
	Fan Motor Capacitor	μF	2.5	2.5
	Air Flow Volume of Outdoor Side	m^3/h	/	/
	Fan Type		Axial-flow	Axial-flow
	Fan Diameter	mm	Φ349	Φ349
	Sound Pressure Level (H/M/L)	dB (A)	63/61/59	63/61/59
	Sound Power Level (H/M/L)	dB (A)	73/71/59	73/71/59
	Defrosting Method		/	/

The above data is subject to change without notice. Please refer to the nameplate of the unit.

Parameter		Unit	Value	
Model			GAE07AB-D3RNB2A	GAA07AB-D3RNB2A
Product Code			CC060001701	CC060001801
Power Supply	Rated Voltage	V~	208/230	208/230
	Rated Frequency	Hz	60	60
	Phases		1	1
Cooling Capacity		Btu/h	7600/7700	7600/7700
Heating Capacity		Btu/h	/	6100/6300
Cooling Power Input		W	620/640	655/665
Heating Power Input		W	/	540/560
Cooling Power Current		A	3.0/2.8	3.0/2.8
Heating Power Current		A	/	2.5/2.4
Electric Heating Power Input		W	2452/3000	2452/3000
Electric Heating Power Current		A	12.2/13.2	12.2/13.2
Rated Input		W	736	736
Rated Current		A	3	3
Air Flow Volume(H/M/L)		m^3/h	500/470/440	500/470/440
Dehumidifying Volume		L/h	0.8	0.8
EER		Btu/w.h	12.2/12	11.6/11.6
COP		Btu/w.h	/	11.3/11.3
Application Area		m^2	10-16	10-16
Climate Type			T1	T1
Isolation			I	I
Moisture Protection			IP24	IP24
Permissible Excessive Operating Pressure for the Discharge Side		MPa	3.8	3.8
Permissible Excessive Operating Pressure for the Suction Side		MPa	2	2
Dimension (WXHXD)		mm	1069X406X546	1069X406X546
Dimension of Carton Box (LXWXH)		mm	1144X645X454	1144X645X454
Dimension of Package (LXWXH)		mm	1147X648X469	1147X648X469
Net Weight		kg	57	57
Gross Weight		kg	67	67
Refrigerant			R410A	R410A
Refrigerant Charge		kg	0.51	0.58
Indoor Side	Fan Type		Cross-flow	Cross-flow
	Diameter Length(DXL)	mm	Φ121X706	Φ121X706
	Fan Motor Speed(H/M/L)	r/min	840/790/740	1030/970/890
	Output of Fan Motor	W	18	21
	Fan Motor RLA	A	0.15	0.36
	Fan Motor Capacitor	μF	1	1
	Input of Heater	W	2452/3000	2452/3000
	Evaporator Form		Alumium Tube	Alumium Tube
	Pipe Diameter	mm	Φ7.94	Φ7.94
	Row-fin Gap	mm	2-1.4	2-1.4
	Coil Length (LXDXW)	mm	698X38.1X242	698X38.1X242
	Swing Motor Model		/	/
	Output of Swing Motor	W	/	/
	Fuse	A	3.15	3.15
	Sound Pressure Level (H/M/L)	dB (A)	49/48/47	51/50/49
	Sound Power Level (H/M/L)	dB (A)	59/58/57	61/60/59

Outdoor Side	Compressor Manufacturer/ Trademark		PANASONIC WANBAO COMPRESSOR (GUANGZHOU) CO.,LTD	PANASONIC WANBAO COMPRESSOR (GUANGZHOU) CO.,LTD
	Compressor Model		5RS062FAA21	5RS062FAA21
	Compressor Oil		FV50S	FV50S
	Compressor Type		Rotary	Rotary
	L.R.A.	A	19	19
	Compressor RLA	A	2.8	2.8
	Compressor Power Input	W	630	630
	Overload Protector		B130-140-241E	B130-140-241E
	Throttling Method		Capillary	Capillary
	Operation Temp	ºC	16~30	16~30
	Ambient Temp (Cooling)	ºC	13~46	13~46
	Ambient Temp (Heating)	ºC	≤24	≤24
	Condenser Form		Aluminum Fin-copper Tube	Aluminum Fin-copper Tube
	Pipe Diameter	mm	Φ5	Φ5
	Rows-fin Gap	mm	2-1.3	2-1.3
	Coil Length (LXDXW)	mm	635X22.8X343	635X22.8X343
	Fan Motor Speed	rpm	1370	1370
	Output of Fan Motor	W	40	40
	Fan Motor RLA	A	0.42	0.42
	Fan Motor Capacitor	μF	2	2
	Air Flow Volume of Outdoor Side	m^3/h	/	/
	Fan Type		Axial-flow	Axial-flow
	Fan Diameter	mm	Φ349	Φ349
	Sound Pressure Level (H/M/L)	dB (A)	61/59/57	61/59/57
	Sound Power Level (H/M/L)	dB (A)	71/69/67	71/69/67
	Defrosting Method		/	/

The above data is subject to change without notice. Please refer to the nameplate of the unit.

Parameter		Unit	Value	
Model			GAE09AB-D3RNB2A	GAA09AB-D3RNB2A
Product Code			CC060001901	CC060002001
Power Supply	Rated Voltage	V~	208/230	208/230
	Rated Frequency	Hz	60	60
	Phases		1	1
Cooling Capacity		Btu/h	8800/9000	8800/9000
Heating Capacity		Btu/h	/	7900/8100
Cooling Power Input		W	770/800	770/800
Heating Power Input		W	/	700/720
Cooling Power Current		A	3.9/3.7	3.9/3.7
Heating Power Current		A	/	3.8/3.4
Electric Heating Power Input		W	2452/3000	2452/3000
Electric Heating Power Current		A	12.2/13.2	12.2/13.2
Rated Input		W	893	972
Rated Current		A	4.78	5.36
Air Flow Volume(H/M/L)		m^3/h	500/470/440	530/500/470
Dehumidifying Volume		L/h	1	1
EER		Btu/w.h	11.4/11.3	11.4/11.3
COP		Btu/w.h	/	11.3/11.3
Application Area		m^2	12-18	12-18
Climate Type			T1	T1
Isolation			I	I
Moisture Protection			IP24	IP24
Permissible Excessive Operating Pressure for the Discharge Side		MPa	3.8	3.8
Permissible Excessive Operating Pressure for the Suction Side		MPa	2	2
Dimension (WXHXD)		mm	1069X406X546	1069X406X546
Dimension of Carton Box (LXWXH)		mm	1144X645X454	1144X645X454
Dimension of Package (LXWXH)		mm	1147X648X469	1147X648X469
Net Weight		kg	58	59
Gross Weight		kg	68	69
Refrigerant			R410A	R410A
Refrigerant Charge		kg	0.61	0.71
Indoor Side	Fan Type		Cross-flow	Cross-flow
	Diameter Length(DXL)	mm	Φ121X706	Φ121X706
	Fan Motor Speed(H/M/L)	r/min	1030/970/890	1030/970/890
	Output of Fan Motor	W	21	21
	Fan Motor RLA	A	0.36	0.36
	Fan Motor Capacitor	μF	1	1
	Input of Heater	W	2452/3000	2452/3000
	Evaporator Form		Aluminum Fin-copper Tube	Aluminum Fin-copper Tube
	Pipe Diameter	mm	Φ7	Φ7.94
	Row-fin Gap	mm	2-1.4	2-1.4
	Coil Length (LXDXW)	mm	698X38.1X242	698X38.1X242
	Swing Motor Model		/	/
	Output of Swing Motor	W	/	/
	Fuse	A	3.15	3.15
	Sound Pressure Level (H/M/L)	dB (A)	51/50/49	51/50/49
	Sound Power Level (H/M/L)	dB (A)	61/60/59	61/60/59

Outdoor Side	Compressor Manufacturer/ Trademark		MITSUBISHI ELECTRIC (GUANGZHOU) COMPRESSOR CO.,LTD	MITSUBISHI ELECTRIC (GUANGZHOU) COMPRESSOR CO.,LTD
	Compressor Model		KN073NGFMC	KN073NGFMC
	Compressor Oil		PVE	PVE
	Compressor Type		Rotary	Rotary
	L.R.A.	A	17	17
	Compressor RLA	A	3.7	3.7
	Compressor Power Input	W	740	740
	Overload Protector		/	/
	Throttling Method		Capillary	Capillary
	Operation Temp	ºC	16~30	16~30
	Ambient Temp (Cooling)	ºC	13~46	13~46
	Ambient Temp (Heating)	ºC	≤24	≤24
	Condenser Form		Aluminum Fin-copper Tube	Aluminum Fin-copper Tube
	Pipe Diameter	mm	Φ5	Φ5
	Rows-fin Gap	mm	3-1.4	3-1.4
	Coil Length (LXDXW)	mm	635X34.2X343	635X34.2X343
	Fan Motor Speed	rpm	1370	1370
	Output of Fan Motor	W	40	40
	Fan Motor RLA	A	0.42	0.42
	Fan Motor Capacitor	μF	2	2
	Air Flow Volume of Outdoor Side	m^3/h	/	/
	Fan Type		Axial-flow	Axial-flow
	Fan Diameter	mm	Φ349	Φ349
	Sound Pressure Level (H/M/L)	dB (A)	61/59/57	61/59/57
	Sound Power Level (H/M/L)	dB (A)	71/69/67	71/69/67
	Defrosting Method		/	/

The above data is subject to change without notice. Please refer to the nameplate of the unit.

Parameter		Unit	Value	
Model			GAE12AB-D3RNB2A	GAA12AB-D3RNB2A
Product Code			CC060002101	CC060002201
Power Supply	Rated Voltage	V~	208/230	208/230
	Rated Frequency	Hz	60	60
	Phases		1	1
Cooling Capacity		Btu/h	11800/12000	11800/12000
Heating Capacity		Btu/h	/	10500/10700
Cooling Power Input		W	1120/1120	1120/1120
Heating Power Input		W	/	990/1010
Cooling Power Current		A	5.3/5.1	5.3/5.1
Heating Power Current		A	/	4.7/4.5
Electric Heating Power Input		W	2452/3000	2452/3000
Electric Heating Power Current		A	12.2/13.2	12.2/13.2
Rated Input		W	1394	1447
Rated Current		A	7.57	7.87
Air Flow Volume(H/M/L)		m^3/h	530/500/470	530/500/470
Dehumidifying Volume		L/h	1.3	1.3
EER		Btu/w.h	10.5/10.7	10.5/10.7
COP		Btu/w.h	/	10.6/10.6
Application Area		m^2	16-24	16-24
Climate Type			T1	T1
Isolation			I	I
Moisture Protection			IP24	IP24
Permissible Excessive Operating Pressure for the Discharge Side		MPa	3.8	3.8
Permissible Excessive Operating Pressure for the Suction Side		MPa	2	2
Dimension (WXHXD)		mm	1069X406X546	1069X406X546
Dimension of Carton Box (LXWXH)		mm	1144X645X454	1144X645X454
Dimension of Package (LXWXH)		mm	1147X648X469	1147X648X469
Net Weight		kg	60	61
Gross Weight		kg	70	71
Refrigerant			R410A	R410A
Refrigerant Charge		kg	0.76	0.76
Indoor Side	Fan Type		Cross-flow	Cross-flow
	Diameter Length(DXL)	mm	Φ121X706	Φ121X706
	Fan Motor Speed(H/M/L)	r/min	1100/1000/920	1100/1000/920
	Output of Fan Motor	W	23	23
	Fan Motor RLA	A	0.36	0.36
	Fan Motor Capacitor	μF	1	1
	Input of Heater	W	2452/3000	2452/3000
	Evaporator Form		Aluminum Fin-copper Tube	Aluminum Fin-copper Tube
	Pipe Diameter	mm	Φ7	Φ7
	Row-fin Gap	mm	3-1.4	3-1.4
	Coil Length (LXDXW)	mm	698X38.1X242	698X38.1X242
	Swing Motor Model		/	/
	Output of Swing Motor	W	/	/
	Fuse	A	3.15	3.15
	Sound Pressure Level (H/M/L)	dB (A)	53/52/51	53/52/51
	Sound Power Level (H/M/L)	dB (A)	63/62/61	63/62/61

Outdoor Side	Compressor Manufacturer/ Trademark		RECHI PRECISION CO.,LTD	RECHI PRECISION CO.,LTD
	Compressor Model		44A282AK&FEKC	44A282AK&FEKC
	Compressor Oil		NMOC Ze-Gles RB68EP	NMOC Ze-Gles RB68EP
	Compressor Type		Rotary	Rotary
	L.R.A.	A	29.5	29.5
	Compressor RLA	A	5	5
	Compressor Power Input	W	1125	1125
	Overload Protector		B245-140K-141H	B245-140K-141H
	Throttling Method		Capillary	Capillary
	Operation Temp	ºC	16~30	16~30
	Ambient Temp (Cooling)	ºC	13~46	13~46
	Ambient Temp (Heating)	ºC	≤24	≤24
	Condenser Form		Aluminum Fin-copper Tube	Aluminum Fin-copper Tube
	Pipe Diameter	mm	Φ5	Φ5
	Rows-fin Gap	mm	3-1.4	3-1.4
	Coil Length (LXDXW)	mm	635X34.2X343	635X34.2X343
	Fan Motor Speed	rpm	1370	1370
	Output of Fan Motor	W	65	65
	Fan Motor RLA	A	0.67	0.67
	Fan Motor Capacitor	μF	2.5	2.5
	Air Flow Volume of Outdoor Side	m^3/h	/	/
	Fan Type		Axial-flow	Axial-flow
	Fan Diameter	mm	Φ349	Φ349
	Sound Pressure Level (H/M/L)	dB (A)	63/61/59	63/61/59
	Sound Power Level (H/M/L)	dB (A)	73/71/59	73/71/59
	Defrosting Method		/	/

The above data is subject to change without notice. Please refer to the nameplate of the unit.

Parameter		Unit	Value	
Model			GAE12AB-D3RNB2B	GAA12AB-D3RNB2B
Product Code			CC060002301	CC060002401
Power Supply	Rated Voltage	V~	208/230	208/230
	Rated Frequency	Hz	60	60
	Phases		1	1
Cooling Capacity		Btu/h	11800/12000	11800/12000
Heating Capacity		Btu/h	/	10500/10700
Cooling Power Input		W	1120/1120	1120/1120
Heating Power Input		W	/	990/1010
Cooling Power Current		A	5.3/5.1	5.3/5.1
Heating Power Current		A	/	4.7/4.5
Electric Heating Power Input		W	4087/5000	4087/5000
Electric Heating Power Current		A	20.5/21.5	20.5/21.5
Rated Input		W	1394	1447
Rated Current		A	7.57	7.87
Air Flow Volume(H/M/L)		m^3/h	530/500/470	530/500/470
Dehumidifying Volume		L/h	1.3	1.3
EER		Btu/w.h	10.5/10.7	10.5/10.7
COP		Btu/w.h	/	10.6/10.6
Application Area		m^2	16-24	16-24
Climate Type			T1	T1
Isolation			I	I
Moisture Protection			IP24	IP24
Permissible Excessive Operating Pressure for the Discharge Side		MPa	3.8	3.8
Permissible Excessive Operating Pressure for the Suction Side		MPa	2	2
Dimension (WXHXD)		mm	1069X406X546	1069X406X546
Dimension of Carton Box (LXWXH)		mm	1144X645X454	1144X645X454
Dimension of Package (LXWXH)		mm	1147X648X469	1147X648X469
Net Weight		kg	61	61
Gross Weight		kg	71	71
Refrigerant			R410A	R410A
Refrigerant Charge		kg	0.76	0.76
Indoor Side	Fan Type		Cross-flow	Cross-flow
	Diameter Length(DXL)	mm	Φ121X706	Φ121X706
	Fan Motor Speed(H/M/L)	r/min	1100/1000/920	1100/1000/920
	Output of Fan Motor	W	23	23
	Fan Motor RLA	A	0.36	0.36
	Fan Motor Capacitor	μF	1	1
	Input of Heater	W	4087/5000	4087/5000
	Evaporator Form		Aluminum Fin-copper Tube	Aluminum Fin-copper Tube
	Pipe Diameter	mm	Φ7	Φ7
	Row-fin Gap	mm	3-1.4	3-1.4
	Coil Length (LXDXW)	mm	698X38.1X242	698X38.1X242
	Swing Motor Model		/	/
	Output of Swing Motor	W	/	/
	Fuse	A	3.15	3.15
	Sound Pressure Level (H/M/L)	dB (A)	53/52/51	53/52/51
	Sound Power Level (H/M/L)	dB (A)	63/62/61	63/62/61

Outdoor Side	Compressor Manufacturer/ Trademark		RECHI PRECISION CO.,LTD	RECHI PRECISION CO.,LTD
	Compressor Model		44A282AK&FEKC	44A282AK&FEKC
	Compressor Oil		NMOC Ze-Gles RB68EP	NMOC Ze-Gles RB68EP
	Compressor Type		Rotary	Rotary
	L.R.A.	A	29.5	29.5
	Compressor RLA	A	5	5
	Compressor Power Input	W	1125	1125
	Overload Protector		B245-140K-141H	B245-140K-141H
	Throttling Method		Capillary	Capillary
	Operation Temp	ºC	16~30	16~30
	Ambient Temp (Cooling)	ºC	13~46	13~46
	Ambient Temp (Heating)	ºC	≤24	≤24
	Condenser Form		Aluminum Fin-copper Tube	Aluminum Fin-copper Tube
	Pipe Diameter	mm	Φ5	Φ5
	Rows-fin Gap	mm	3-1.4	3-1.4
	Coil Length (LXDXW)	mm	635X34.2X343	635X34.2X343
	Fan Motor Speed	rpm	1370	1370
	Output of Fan Motor	W	65	65
	Fan Motor RLA	A	0.67	0.67
	Fan Motor Capacitor	μF	2.5	2.5
	Air Flow Volume of Outdoor Side	m^3/h	/	/
	Fan Type		Axial-flow	Axial-flow
	Fan Diameter	mm	Φ349	Φ349
	Sound Pressure Level (H/M/L)	dB (A)	63/61/59	63/61/59
	Sound Power Level (H/M/L)	dB (A)	73/71/59	73/71/59
	Defrosting Method		/	/

The above data is subject to change without notice. Please refer to the nameplate of the unit.

Parameter		Unit	Value	
Model			GAE15AB-D3RNB2B	GAA15AB-D3RNB2B
Product Code			CC060002501	CC060002601
Power Supply	Rated Voltage	V~	208/230	230
	Rated Frequency	Hz	60	60
	Phases		1	1
Cooling Capacity		Btu/h	14600/15000	15000
Heating Capacity		Btu/h	/	13800
Cooling Power Input		W	1510/1530	1530
Heating Power Input		W	/	1390
Cooling Power Current		A	7.5/6.7	6.7
Heating Power Current		A	/	6
Electric Heating Power Input		W	4087/5000	5000
Electric Heating Power Current		A	20.5/21.5	21.5
Rated Input		W	2025	2025
Rated Current		A	11.03	11.03
Air Flow Volume(H/M/L)		m^3/h	580/550/520	580/550/520
Dehumidifying Volume		L/h	1.5	1.5
EER		Btu/w.h	9.7/9.8	9.8
COP		Btu/w.h	/	9.9
Application Area		m^2	21-31	21-31
Climate Type			T1	T1
Isolation			I	I
Moisture Protection			IP24	IP24
Permissible Excessive Operating Pressure for the Discharge Side		MPa	3.8	3.8
Permissible Excessive Operating Pressure for the Suction Side		MPa	2	2
Dimension (WXHXD)		mm	1069X406X546	1069X406X546
Dimension of Carton Box (LXWXH)		mm	1144X645X454	1144X645X454
Dimension of Package (LXWXH)		mm	1147X648X469	1147X648X469
Net Weight		kg	64	65
Gross Weight		kg	74	75
Refrigerant			R410A	R410A
Refrigerant Charge		kg	1.08	1.08
Indoor Side	Fan Type		Cross-flow	Cross-flow
	Diameter Length(DXL)	mm	Φ121X706	Φ121X706
	Fan Motor Speed(H/M/L)	r/min	1100/1000/920	1100/1000/920
	Output of Fan Motor	W	23	23
	Fan Motor RLA	A	0.36	0.36
	Fan Motor Capacitor	μF	1	1
	Input of Heater	W	4087/5000	5000
	Evaporator Form		Aluminum Fin-copper Tube	Aluminum Fin-copper Tube
	Pipe Diameter	mm	Φ7	Φ7
	Row-fin Gap	mm	3-1.4	3-1.4
	Coil Length (LXDXW)	mm	698X38.1X242	698X38.1X242
	Swing Motor Model		/	/
	Output of Swing Motor	W	/	/
	Fuse	A	3.15	3.15
	Sound Pressure Level (H/M/L)	dB (A)	53/52/51	53/52/51
	Sound Power Level (H/M/L)	dB (A)	63/62/61	63/62/61

Outdoor Side	Compressor Manufacturer/ Trademark		PANASONIC WANBAO COMPRESSOR (GUANGZHOU) CO.,LTD	PANASONIC WANBAO COMPRESSOR (GUANGZHOU) CO.,LTD
	Compressor Model		5PS146FAA21	5PS146FAA21
	Compressor Oil		FV50S	FV50S
	Compressor Type		Rotary	Rotary
	L.R.A.	A	32.6	32.6
	Compressor RLA	A	6.6	6.6
	Compressor Power Input	W	1480	1480
	Overload Protector		B205-150-141C	B205-150-141C
	Throttling Method		Capillary	Capillary
	Operation Temp	ºC	16~30	16~30
	Ambient Temp (Cooling)	ºC	13~46	13~46
	Ambient Temp (Heating)	ºC	≤24	≤24
	Condenser Form		Aluminum Fin-copper Tube	Aluminum Fin-copper Tube
	Pipe Diameter	mm	Φ7.94	Φ7.94
	Rows-fin Gap	mm	3-1.4	3-1.4
	Coil Length (LXDXW)	mm	635X57.2X352	635X57.2X352
	Fan Motor Speed	rpm	1370	1370
	Output of Fan Motor	W	65	65
	Fan Motor RLA	A	0.77	0.77
	Fan Motor Capacitor	μF	2.5	2.5
	Air Flow Volume of Outdoor Side	m^3/h	/	/
	Fan Type		Axial-flow	Axial-flow
	Fan Diameter	mm	Φ349	Φ349
	Sound Pressure Level (H/M/L)	dB (A)	63/61/59	63/61/59
	Sound Power Level (H/M/L)	dB (A)	73/71/59	73/71/59
	Defrosting Method		/	/

The above data is subject to change without notice. Please refer to the nameplate of the unit.

Parameter		Unit	Value	
Model			GAE07AB-D3RNB2A	GAA07AB-D3RNB2A
Product Code			CC060001703	CC060001803
Power Supply	Rated Voltage	V~	208/230	208/230
	Rated Frequency	Hz	60	60
	Phases		1	1
Cooling Capacity		Btu/h	7600/7700	7600/7700
Heating Capacity		Btu/h	/	6100/6300
Cooling Power Input		W	620/640	655/665
Heating Power Input		W	/	540/560
Cooling Power Current		A	3.0/2.8	3.0/2.8
Heating Power Current		A	/	2.5/2.4
Electric Heating Power Input		W	2452/3000	2452/3000
Electric Heating Power Current		A	12.2/13.2	12.2/13.2
Rated Input		W	736	736
Rated Current		A	3	3
Air Flow Volume(H/M/L)		m^3/h	500/470/440	500/470/440
Dehumidifying Volume		L/h	0.8	0.8
EER		Btu/w.h	12.2/12	11.6/11.6
COP		Btu/w.h	/	11.3/11.3
Application Area		m^2	10-16	10-16
Climate Type			T1	T1
Isolation			I	I
Moisture Protection			IP24	IP24
Permissible Excessive Operating Pressure for the Discharge Side		MPa	3.8	3.8
Permissible Excessive Operating Pressure for the Suction Side		MPa	2	2
Dimension (WXHXD)		mm	1069X406X546	1069X406X546
Dimension of Carton Box (LXWXH)		mm	1144X645X454	1144X645X454
Dimension of Package (LXWXH)		mm	1147X648X469	1147X648X469
Net Weight		kg	46	46
Gross Weight		kg	57	57
Refrigerant			R410A	R410A
Refrigerant Charge		kg	0.51	0.58
Indoor Side	Fan Type		Cross-flow	Cross-flow
	Diameter Length(DXL)	mm	Φ121X706	Φ121X706
	Fan Motor Speed(H/M/L)	r/min	840/790/740	1030/970/890
	Output of Fan Motor	W	18	21
	Fan Motor RLA	A	0.15	0.36
	Fan Motor Capacitor	μF	1	1
	Input of Heater	W	2452/3000	2452/3000
	Evaporator Form		Alumium Tube	Alumium Tube
	Pipe Diameter	mm	Φ7.94	Φ7.94
	Row-fin Gap	mm	2-1.4	2-1.4
	Coil Length (LXDXW)	mm	698X38.1X242	698X38.1X242
	Swing Motor Model		/	/
	Output of Swing Motor	W	/	/
	Fuse	A	3.15	3.15
	Sound Pressure Level (H/M/L)	dB (A)	49/48/47	51/50/49
	Sound Power Level (H/M/L)	dB (A)	59/58/57	61/60/59

Outdoor Side	Compressor Manufacturer/Trademark		PANASONIC WANBAO COMPRESSOR (GUANGZHOU) CO.,LTD	PANASONIC WANBAO COMPRESSOR (GUANGZHOU) CO.,LTD
	Compressor Model		5RS062FAA21	5RS062FAA21
	Compressor Oil		FV50S	FV50S
	Compressor Type		Rotary	Rotary
	L.R.A.	A	19	19
	Compressor RLA	A	2.8	2.8
	Compressor Power Input	W	630	630
	Overload Protector		B130-140-241E	B130-140-241E
	Throttling Method		Capillary	Capillary
	Operation Temp	ºC	16~30	16~30
	Ambient Temp (Cooling)	ºC	13~46	13~46
	Ambient Temp (Heating)	ºC	≤24	≤24
	Condenser Form		Aluminum Fin-copper Tube	Aluminum Fin-copper Tube
	Pipe Diameter	mm	Φ5	Φ5
	Rows-fin Gap	mm	2-1.3	2-1.3
	Coil Length (LXDXW)	mm	635X22.8X343	635X22.8X343
	Fan Motor Speed	rpm	1370	1370
	Output of Fan Motor	W	40	40
	Fan Motor RLA	A	0.42	0.42
	Fan Motor Capacitor	μF	2	2
	Air Flow Volume of Outdoor Side	m^3/h	/	/
	Fan Type		Axial-flow	Axial-flow
	Fan Diameter	mm	Φ349	Φ349
	Sound Pressure Level (H/M/L)	dB (A)	61/59/57	61/59/57
	Sound Power Level (H/M/L)	dB (A)	71/69/67	71/69/67
	Defrosting Method		/	/

The above data is subject to change without notice. Please refer to the nameplate of the unit.

Parameter		Unit	Value	
Model			GAE09AB-D3RNB2A	GAA09AB-D3RNB2A
Product Code			CC060001903	CC060002003
Power Supply	Rated Voltage	V~	208/230	208/230
	Rated Frequency	Hz	60	60
	Phases		1	1
Cooling Capacity		Btu/h	8800/9000	8800/9000
Heating Capacity		Btu/h	/	7900/8100
Cooling Power Input		W	770/800	770/800
Heating Power Input		W	/	700/720
Cooling Power Current		A	3.9/3.7	3.9/3.7
Heating Power Current		A	/	3.8/3.4
Electric Heating Power Input		W	2452/3000	2452/3000
Electric Heating Power Current		A	12.2/13.2	12.2/13.2
Rated Input		W	893	972
Rated Current		A	4.78	5.36
Air Flow Volume(H/M/L)		m^3/h	500/470/440	530/500/470
Dehumidifying Volume		L/h	1	1
EER		Btu/w.h	11.4/11.3	11.4/11.3
COP		Btu/w.h	/	11.3/11.3
Application Area		m^2	12-18	12-18
Climate Type			T1	T1
Isolation			I	I
Moisture Protection			IP24	IP24
Permissible Excessive Operating Pressure for the Discharge Side		MPa	3.8	3.8
Permissible Excessive Operating Pressure for the Suction Side		MPa	2	2
Dimension (WXHXD)		mm	1069X406X546	1069X406X546
Dimension of Carton Box (LXWXH)		mm	1144X645X454	1144X645X454
Dimension of Package (LXWXH)		mm	1147X648X469	1147X648X469
Net Weight		kg	47	48
Gross Weight		kg	58	59
Refrigerant			R410A	R410A
Refrigerant Charge		kg	0.61	0.71
Indoor Side	Fan Type		Cross-flow	Cross-flow
	Diameter Length(DXL)	mm	Φ121X706	Φ121X706
	Fan Motor Speed(H/M/L)	r/min	1030/970/890	1030/970/890
	Output of Fan Motor	W	21	21
	Fan Motor RLA	A	0.36	0.36
	Fan Motor Capacitor	μF	1	1
	Input of Heater	W	2452/3000	2452/3000
	Evaporator Form		Aluminum Fin-copper Tube	Aluminum Fin-copper Tube
	Pipe Diameter	mm	Φ7	Φ7.94
	Row-fin Gap	mm	2-1.4	2-1.4
	Coil Length (LXDXW)	mm	699X25.4X248	699X38.1X242
	Swing Motor Model		/	/
	Output of Swing Motor	W	/	/
	Fuse	A	3.15	3.15
	Sound Pressure Level (H/M/L)	dB (A)	51/50/49	51/50/49
	Sound Power Level (H/M/L)	dB (A)	61/60/59	61/60/59

Outdoor Side	Compressor Manufacturer/Trademark		MITSUBISHI ELECTRIC (GUANGZHOU) COMPRESSOR CO.,LTD	MITSUBISHI ELECTRIC (GUANGZHOU) COMPRESSOR CO.,LTD
	Compressor Model		KN073NGFMC	KN073NGFMC
	Compressor Oil		PVE	PVE
	Compressor Type		Rotary	Rotary
	L.R.A.	A	17	17
	Compressor RLA	A	3.7	3.7
	Compressor Power Input	W	740	740
	Overload Protector		/	/
	Throttling Method		Capillary	Capillary
	Operation Temp	ºC	16~30	16~30
	Ambient Temp (Cooling)	ºC	13~46	13~46
	Ambient Temp (Heating)	ºC	≤24	≤24
	Condenser Form		Aluminum Fin-copper Tube	Aluminum Fin-copper Tube
	Pipe Diameter	mm	Φ5	Φ5
	Rows-fin Gap	mm	3-1.4	3-1.4
	Coil Length (LXDXW)	mm	635X34.2X343	635X34.2X343
	Fan Motor Speed	rpm	1370	1370
	Output of Fan Motor	W	40	40
	Fan Motor RLA	A	0.42	0.42
	Fan Motor Capacitor	μF	2	2
	Air Flow Volume of Outdoor Side	m^3/h	/	/
	Fan Type		Axial-flow	Axial-flow
	Fan Diameter	mm	Φ349	Φ349
	Sound Pressure Level (H/M/L)	dB (A)	61/59/57	61/59/57
	Sound Power Level (H/M/L)	dB (A)	71/69/67	71/69/67
	Defrosting Method		/	/

The above data is subject to change without notice. Please refer to the nameplate of the unit.

Parameter		Unit	Value	
Model			GAE12AB-D3RNB2A	GAA12AB-D3RNB2A
Product Code			CC060002103	CC060002203
Power Supply	Rated Voltage	V~	208/230	208/230
	Rated Frequency	Hz	60	60
	Phases		1	1
Cooling Capacity		Btu/h	11800/12000	11800/12000
Heating Capacity		Btu/h	/	10500/10700
Cooling Power Input		W	1120/1120	1120/1120
Heating Power Input		W	/	990/1010
Cooling Power Current		A	5.3/5.1	5.3/5.1
Heating Power Current		A	/	4.7/4.5
Electric Heating Power Input		W	2452/3000	2452/3000
Electric Heating Power Current		A	12.2/13.2	12.2/13.2
Rated Input		W	1394	1447
Rated Current		A	7.57	7.87
Air Flow Volume(H/M/L)		m^3/h	530/500/470	530/500/470
Dehumidifying Volume		L/h	1.3	1.3
EER		Btu/w.h	10.5/10.7	10.5/10.7
COP		Btu/w.h	/	10.6/10.6
Application Area		m^2	16-24	16-24
Climate Type			T1	T1
Isolation			I	I
Moisture Protection			IP24	IP24
Permissible Excessive Operating Pressure for the Discharge Side		MPa	3.8	3.8
Permissible Excessive Operating Pressure for the Suction Side		MPa	2	2
Dimension (WXHXD)		mm	1069X406X546	1069X406X546
Dimension of Carton Box (LXWXH)		mm	1144X645X454	1144X645X454
Dimension of Package (LXWXH)		mm	1147X648X469	1147X648X469
Net Weight		kg	49	50
Gross Weight		kg	60	61
Refrigerant			R410A	R410A
Refrigerant Charge		kg	0.76	0.76
Indoor Side	Fan Type		Cross-flow	Cross-flow
	Diameter Length(DXL)	mm	Φ121X706	Φ121X706
	Fan Motor Speed(H/M/L)	r/min	1100/1000/920	1100/1000/920
	Output of Fan Motor	W	23	23
	Fan Motor RLA	A	0.36	0.36
	Fan Motor Capacitor	μF	1	1
	Input of Heater	W	2452/3000	2452/3000
	Evaporator Form		Aluminum Fin-copper Tube	Aluminum Fin-copper Tube
	Pipe Diameter	mm	Φ7	Φ7
	Row-fin Gap	mm	3-1.4	3-1.4
	Coil Length (LXDXW)	mm	698X38.1X242	698X38.1X242
	Swing Motor Model		/	/
	Output of Swing Motor	W	/	/
	Fuse	A	3.15	3.15
	Sound Pressure Level (H/M/L)	dB (A)	53/52/51	53/52/51
	Sound Power Level (H/M/L)	dB (A)	63/62/61	63/62/61

Outdoor Side	Compressor Manufacturer/Trademark		RECHI PRECISION CO.,LTD	RECHI PRECISION CO.,LTD
	Compressor Model		44A282AK&FEKC	44A282AK&FEKC
	Compressor Oil		NMOC Ze-Gles RB68EP	NMOC Ze-Gles RB68EP
	Compressor Type		Rotary	Rotary
	L.R.A.	A	29.5	29.5
	Compressor RLA	A	5	5
	Compressor Power Input	W	1125	1125
	Overload Protector		B245-140K-141H	B245-140K-141H
	Throttling Method		Capillary	Capillary
	Operation Temp	ºC	16~30	16~30
	Ambient Temp (Cooling)	ºC	13~46	13~46
	Ambient Temp (Heating)	ºC	≤24	≤24
	Condenser Form		Aluminum Fin-copper Tube	Aluminum Fin-copper Tube
	Pipe Diameter	mm	Φ5	Φ5
	Rows-fin Gap	mm	3-1.4	3-1.4
	Coil Length (LXDXW)	mm	635X34.2X343	635X34.2X343
	Fan Motor Speed	rpm	1370	1370
	Output of Fan Motor	W	65	65
	Fan Motor RLA	A	0.67	0.67
	Fan Motor Capacitor	μF	2.5	2.5
	Air Flow Volume of Outdoor Side	m^3/h	/	/
	Fan Type		Axial-flow	Axial-flow
	Fan Diameter	mm	Φ349	Φ349
	Sound Pressure Level (H/M/L)	dB (A)	63/61/59	63/61/59
	Sound Power Level (H/M/L)	dB (A)	73/71/59	73/71/59
	Defrosting Method		/	/

The above data is subject to change without notice. Please refer to the nameplate of the unit.

Parameter		Unit	Value	
Model			GAE12AB-D3RNB2B	GAA12AB-D3RNB2B
Product Code			CC060002303	CC060002403
Power Supply	Rated Voltage	V~	208/230	208/230
	Rated Frequency	Hz	60	60
	Phases		1	1
Cooling Capacity		Btu/h	11800/12000	11800/12000
Heating Capacity		Btu/h	/	10500/10700
Cooling Power Input		W	1120/1120	1120/1120
Heating Power Input		W	/	990/1010
Cooling Power Current		A	5.3/5.1	5.3/5.1
Heating Power Current		A	/	4.7/4.5
Electric Heating Power Input		W	4087/5000	4087/5000
Electric Heating Power Current		A	20.5/21.5	20.5/21.5
Rated Input		W	1394	1447
Rated Current		A	7.57	7.87
Air Flow Volume(H/M/L)		m^3/h	530/500/470	530/500/470
Dehumidifying Volume		L/h	1.3	1.3
EER		Btu/w.h	10.5/10.7	10.5/10.7
COP		Btu/w.h	/	10.6/10.6
Application Area		m^2	16-24	16-24
Climate Type			T1	T1
Isolation			I	I
Moisture Protection			IP24	IP24
Permissible Excessive Operating Pressure for the Discharge Side		MPa	3.8	3.8
Permissible Excessive Operating Pressure for the Suction Side		MPa	2	2
Dimension (WXHXD)		mm	1069X406X546	1069X406X546
Dimension of Carton Box (LXWXH)		mm	1144X645X454	1144X645X454
Dimension of Package (LXWXH)		mm	1147X648X469	1147X648X469
Net Weight		kg	50	50
Gross Weight		kg	61	61
Refrigerant			R410A	R410A
Refrigerant Charge		kg	0.76	0.76
Indoor Side	Fan Type		Cross-flow	Cross-flow
	Diameter Length(DXL)	mm	Φ121X706	Φ121X706
	Fan Motor Speed(H/M/L)	r/min	1100/1000/920	1100/1000/920
	Output of Fan Motor	W	23	23
	Fan Motor RLA	A	0.36	0.36
	Fan Motor Capacitor	μF	1	1
	Input of Heater	W	4087/5000	4087/5000
	Evaporator Form		Aluminum Fin-copper Tube	Aluminum Fin-copper Tube
	Pipe Diameter	mm	Φ7	Φ7
	Row-fin Gap	mm	3-1.4	3-1.4
	Coil Length (LXDXW)	mm	698X38.1X242	698X38.1X242
	Swing Motor Model		/	/
	Output of Swing Motor	W	/	/
	Fuse	A	3.15	3.15
	Sound Pressure Level (H/M/L)	dB (A)	53/52/51	53/52/51
	Sound Power Level (H/M/L)	dB (A)	63/62/61	63/62/61

Outdoor Side	Compressor Manufacturer/Trademark		RECHI PRECISION CO.,LTD	RECHI PRECISION CO.,LTD
	Compressor Model		44A282AK&FEKC	44A282AK&FEKC
	Compressor Oil		NMOC Ze-Gles RB68EP	NMOC Ze-Gles RB68EP
	Compressor Type		Rotary	Rotary
	L.R.A.	A	29.5	29.5
	Compressor RLA	A	5	5
	Compressor Power Input	W	1125	1125
	Overload Protector		B245-140K-141H	B245-140K-141H
	Throttling Method		Capillary	Capillary
	Operation Temp	ºC	16~30	16~0
	Ambient Temp (Cooling)	ºC	13~46	13~46
	Ambient Temp (Heating)	ºC	≤24	≤24
	Condenser Form		Aluminum Fin-copper Tube	Aluminum Fin-copper Tube
	Pipe Diameter	mm	Φ5	Φ5
	Rows-fin Gap	mm	3-1.4	3-1.4
	Coil Length (LXDXW)	mm	635X34.2X343	635X34.2X343
	Fan Motor Speed	rpm	1370	1370
	Output of Fan Motor	W	65	65
	Fan Motor RLA	A	0.67	0.67
	Fan Motor Capacitor	μF	2.5	2.5
	Air Flow Volume of Outdoor Side	m^3/h	/	/
	Fan Type		Axial-flow	Axial-flow
	Fan Diameter	mm	Φ349	Φ349
	Sound Pressure Level (H/M/L)	dB (A)	63/61/59	63/61/59
	Sound Power Level (H/M/L)	dB (A)	73/71/59	73/71/59
	Defrosting Method		/	/

The above data is subject to change without notice. Please refer to the nameplate of the unit.

Parameter		Unit	Value	
Model			GAE15AB-D3RNB2B	GAA15AB-D3RNB2B
Product Code			CC060002503	CC060002603
Power Supply	Rated Voltage	V~	208/230	230
	Rated Frequency	Hz	60	60
	Phases		1	1
Cooling Capacity		Btu/h	14600/15000	15000
Heating Capacity		Btu/h	/	13800
Cooling Power Input		W	1510/1530	1530
Heating Power Input		W	/	1390
Cooling Power Current		A	7.5/6.7	6.7
Heating Power Current		A	/	6
Electric Heating Power Input		W	4087/5000	4087/5000
Electric Heating Power Current		A	20.5/21.5	20.5/21.5
Rated Input		W	2025	2025
Rated Current		A	11.03	11.03
Air Flow Volume(H/M/L)		m^3/h	580/550/520	580/550/520
Dehumidifying Volume		L/h	1.5	1.5
EER		Btu/w.h	9.7/9.8	9.8
COP		Btu/w.h	/	9.9
Application Area		m^2	21-31	21-31
Climate Type			T1	T1
Isolation			I	I
Moisture Protection			IP24	IP24
Permissible Excessive Operating Pressure for the Discharge Side		MPa	3.8	3.8
Permissible Excessive Operating Pressure for the Suction Side		MPa	2	2
Dimension (WXHXD)		mm	1069X406X546	1069X406X546
Dimension of Carton Box (LXWXH)		mm	1144X645X454	1144X645X454
Dimension of Package (LXWXH)		mm	1147X648X469	1147X648X469
Net Weight		kg	53	54
Gross Weight		kg	64	65
Refrigerant			R410A	R410A
Refrigerant Charge		kg	1.08	1.08
Indoor Side	Fan Type		Cross-flow	Cross-flow
	Diameter Length(DXL)	mm	Φ121X706	Φ121X706
	Fan Motor Speed(H/M/L)	r/min	1100/1000/920	1100/1000/920
	Output of Fan Motor	W	23	23
	Fan Motor RLA	A	0.36	0.36
	Fan Motor Capacitor	μF	1	1
	Input of Heater	W	4087/5000	5000
	Evaporator Form		Aluminum Fin-copper Tube	Aluminum Fin-copper Tube
	Pipe Diameter	mm	Φ7	Φ7
	Row-fin Gap	mm	3-1.4	3-1.4
	Coil Length (LXDXW)	mm	698X38.1X248	698X38.1X248
	Swing Motor Model		/	/
	Output of Swing Motor	W	/	/
	Fuse	A	3.15	3.15
	Sound Pressure Level (H/M/L)	dB (A)	53/52/51	53/52/51
	Sound Power Level (H/M/L)	dB (A)	63/62/61	63/62/61

Outdoor Side	Compressor Manufacturer/Trademark		PANASONIC WANBAO COMPRESSOR (GUANGZHOU) CO.,LTD	PANASONIC WANBAO COMPRESSOR (GUANGZHOU) CO.,LTD
	Compressor Model		5PS146FAA21	5PS146FAA21
	Compressor Oil		FV50S	FV50S
	Compressor Type		Rotary	Rotary
	L.R.A.	A	32.6	32.6
	Compressor RLA	A	6.6	6.6
	Compressor Power Input	W	1480	1480
	Overload Protector		B205-150-141C	B205-150-141C
	Throttling Method		Capillary	Capillary
	Operation Temp	ºC	16~30	16~30
	Ambient Temp (Cooling)	ºC	13~46	13~46
	Ambient Temp (Heating)	ºC	≤24	≤24
	Condenser Form		Aluminum Fin-copper Tube	Aluminum Fin-copper Tube
	Pipe Diameter	mm	Φ7.94	Φ7.94
	Rows-fin Gap	mm	3-1.4	3-1.4
	Coil Length (LXDXW)	mm	635X57.2X352	635X57.2X352
	Fan Motor Speed	rpm	1370	1370
	Output of Fan Motor	W	65	65
	Fan Motor RLA	A	0.77	0.77
	Fan Motor Capacitor	μF	2.5	2.5
	Air Flow Volume of Outdoor Side	m^3/h	/	/
	Fan Type		Axial-flow	Axial-flow
	Fan Diameter	mm	Φ349	Φ349
	Sound Pressure Level (H/M/L)	dB (A)	63/61/59	63/61/59
	Sound Power Level (H/M/L)	dB (A)	73/71/59	73/71/59
	Defrosting Method		/	/

The above data is subject to change without notice. Please refer to the nameplate of the unit.

Parameter		Unit	Value	
Model			GAE07AB-D3RNB3A	GAA07AB-D3RNB3A
Product Code			CC060024000	CC060024100
Power Supply	Rated Voltage	V~	208/230	208/230
	Rated Frequency	Hz	60	60
	Phases		1	1
Cooling Capacity		Btu/h	7600/7700	7600/7700
Heating Capacity		Btu/h	/	6100/6300
Cooling Power Input		W	620/640	620/640
Heating Power Input		W	/	530/540
Cooling Power Current		A	3.0/2.8	3.0/2.8
Heating Power Current		A	/	2.6/2.5
Electric Heating Power Input		W	2452/3000	2452/3000
Electric Heating Power Current		A	12.2/13.2	12.2/13.2
Rated Input		W	800	840
Rated Current		A	4.20	4.40
Air Flow Volume(H/M/L)		m^3/h	500/470/440	500/470/440
Dehumidifying Volume		L/h	0.8	0.8
EER		Btu/w.h	12.2/12	12.2/12
COP		Btu/w.h	/	11.5/11.7
Application Area		m^2	10-16	10-16
Climate Type			T1	T1
Isolation			I	I
Moisture Protection			IP24	IP24
Permissible Excessive Operating Pressure for the Discharge Side		MPa	4.3	4.3
Permissible Excessive Operating Pressure for the Suction Side		MPa	2.5	2.5
Dimension (WXHXD)		mm	1069X406X546	1069X406X546
Dimension of Carton Box (LXWXH)		mm	1144X645X454	1144X645X454
Dimension of Package (LXWXH)		mm	1147X648X469	1147X648X469
Net Weight		kg	46	46
Gross Weight		kg	57	57
Refrigerant			R410A	R410A
Refrigerant Charge		kg	0.48	0.7
Indoor Side	Fan Type		Cross-flow	Cross-flow
	Diameter Length(DXL)	mm	Φ121X706	Φ121X706
	Fan Motor Speed(H/M/L)	r/min	840/790/740	840/790/740
	Output of Fan Motor	W	18	18
	Fan Motor RLA	A	0.15	0.15
	Fan Motor Capacitor	μF	1	1
	Input of Heater	W	2452/3000	2452/3000
	Evaporator Form		Alumium Tube	Alumium Tube
	Pipe Diameter	mm	Φ7.94	Φ7.94
	Row-fin Gap	mm	2-1.4	2-1.4
	Coil Length (LXDXW)	mm	698X38.1X242	698X38.1X242
	Swing Motor Model		/	/
	Output of Swing Motor	W	/	/
	Fuse	A	3.15	3.15
	Sound Pressure Level (H/M/L)	dB (A)	52/51/50	52/51/50
	Sound Power Level (H/M/L)	dB (A)	62/61/60	62/61/60

Outdoor Side	Compressor Manufacturer/ Trademark		RECHI PRECISION CO;LTD	RECHI PRECISION CO;LTD
	Compressor Model		39B152AD&5DKB	39B152AD&5DKB
	Compressor Oil		NMOC Ze-Gles RB68EP	NMOC Ze-Gles RB68EP
	Compressor Type		Rotary	Rotary
	L.R.A.	A	13.5	13.5
	Compressor RLA	A	2.7	2.7
	Compressor Power Input	W	615	615
	Overload Protector		B110-160K-241C	B110-160K-241C
	Throttling Method		Capillary	Capillary
	Operation Temp	ºC	16~30	16~30
	Ambient Temp (Cooling)	ºC	13~46	13~46
	Ambient Temp (Heating)	ºC	≤24	≤24
	Condenser Form		Aluminum Fin-copper Tube	Aluminum Fin-copper Tube
	Pipe Diameter	mm	Φ7	Φ7
	Rows-fin Gap	mm	2-1.3	2-1.3
	Coil Length (LXDXW)	mm	635X25.4X343	635X25.4X343
	Fan Motor Speed	rpm	1370	1370
	Output of Fan Motor	W	40	40
	Fan Motor RLA	A	0.42	0.42
	Fan Motor Capacitor	μF	2	2
	Air Flow Volume of Outdoor Side	m^3/h	800	800
	Fan Type		Axial-flow	Axial-flow
	Fan Diameter	mm	Φ349	Φ349
	Sound Pressure Level (H/M/L)	dB (A)	66/65/64	66/65/64
	Sound Power Level (H/M/L)	dB (A)	76/75/74	76/75/74
	Defrosting Method		/	/

The above data is subject to change without notice. Please refer to the nameplate of the unit.

Parameter		Unit	Value
Model			GAA15AB-D3RNB3B
Product Code			CC060024400
Power Supply	Rated Voltage	V~	208/230
	Rated Frequency	Hz	60
	Phases		1
Cooling Capacity		Btu/h	14200/14500
Heating Capacity		Btu/h	13000/13300
Cooling Power Input		W	1460/1480
Heating Power Input		W	1270/1300
Cooling Power Current		A	7.5/6.7
Heating Power Current		A	6.2/5.8
Electric Heating Power Input		W	4087/5000
Electric Heating Power Current		A	20.5/21.5
Rated Input		W	2454
Rated Current		A	10.67
Air Flow Volume(H/M/L)		m^3/h	580/550/520
Dehumidifying Volume		L/h	1.5
EER		Btu/w.h	9.7/9.8
COP		Btu/w.h	10.2/10.2
Application Area		m^2	21-31
Climate Type			T1
Isolation			I
Moisture Protection			IP24
Permissible Excessive Operating Pressure for the Discharge Side		MPa	4.3
Permissible Excessive Operating Pressure for the Suction Side		MPa	2.5
Dimension (WXHXD)		mm	1069X406X546
Dimension of Carton Box (LXWXH)		mm	1155X675X460
Dimension of Package (LXWXH)		mm	1158X678X475
Net Weight		kg	54
Gross Weight		kg	65
Refrigerant			R410A
Refrigerant Charge		kg	1.08
Indoor Side	Fan Type		Cross-flow
	Diameter Length(DXL)	mm	Φ121X706
	Fan Motor Speed(H/M/L)	r/min	1100/1000/920
	Output of Fan Motor	W	23
	Fan Motor RLA	A	0.36
	Fan Motor Capacitor	μF	1
	Input of Heater	W	4087/5000
	Evaporator Form		Aluminum Fin-copper Tube
	Pipe Diameter	mm	Φ7
	Row-fin Gap	mm	3-1.4
	Coil Length (LXDXW)	mm	698X38.1X248
	Swing Motor Model		/
	Output of Swing Motor	W	/
	Fuse	A	3.15
	Sound Pressure Level (H/M/L)	dB (A)	56/55/54
	Sound Power Level (H/M/L)	dB (A)	66/65/64

Outdoor Side	Compressor Manufacturer/Trademark		ZHUHAI LANDA COMPRESSOR CO.LTD /GREE
	Compressor Model		QXA-C139rB030
	Compressor Oil		RB68EP/FVC68D
	Compressor Type		Rotary
	L.R.A.	A	36
	Compressor RLA	A	6.4
	Compressor Power Input	W	1410
	Overload Protector		B205-150-141C
	Throttling Method		Internal
	Operation Temp	ºC	16~30
	Ambient Temp (Cooling)	ºC	13~46
	Ambient Temp (Heating)	ºC	≤24
	Condenser Form		Aluminum Fin-copper Tube
	Pipe Diameter	mm	Φ7.94
	Rows-fin Gap	mm	3-1.4
	Coil Length (LXDXW)	mm	635X57.2X352
	Fan Motor Speed	rpm	1600
	Output of Fan Motor	W	65
	Fan Motor RLA	A	0.77
	Fan Motor Capacitor	μF	2.5
	Air Flow Volume of Outdoor Side	m^3/h	1000
	Fan Type		Axial-flow
	Fan Diameter	mm	Φ349
	Sound Pressure Level (H/M/L)	dB (A)	66/65/64
	Sound Power Level (H/M/L)	dB (A)	76/75/74
	Defrosting Method		/

The above data is subject to change without notice. Please refer to the nameplate of the unit.

Parameter		Unit	Value
Model			GAA12AB-D3RNB2A
Product Code			CC060002206
Power Supply	Rated Voltage	V~	208/230
	Rated Frequency	Hz	60
	Phases		1
Cooling Capacity		Btu/h	11800/12000
Heating Capacity		Btu/h	10500/10700
Cooling Power Input		W	1120/1120
Heating Power Input		W	990/1010
Cooling Power Current		A	5.3/5.1
Heating Power Current		A	4.7/4.5
Electric Heating Power Input		W	2452/3000
Electric Heating Power Current		A	12.2/13.2
Rated Input		W	1447
Rated Current		A	7.87
Air Flow Volume(H/M/L)		m^3/h	530/500/470
Dehumidifying Volume		L/h	1.3
EER		Btu/w.h	10.5/10.7
COP		Btu/w.h	10.6/10.6
Application Area		m^2	16-24
Climate Type			T1
Isolation			I
Moisture Protection			IP24
Permissible Excessive Operating Pressure for the Discharge Side		MPa	3.8
Permissible Excessive Operating Pressure for the Suction Side		MPa	2
Dimension (WXHXD)		mm	1069X406X546
Dimension of Carton Box (LXWXH)		mm	1144X645X454
Dimension of Package (LXWXH)		mm	1147X648X469
Net Weight		kg	50
Gross Weight		kg	61
Refrigerant			R410A
Refrigerant Charge		kg	0.76
Indoor Side	Fan Type		Cross-flow
	Diameter Length(DXL)	mm	Φ121X706
	Fan Motor Speed(H/M/L)	r/min	1100/1000/920
	Output of Fan Motor	W	23
	Fan Motor RLA	A	0.36
	Fan Motor Capacitor	μF	1
	Input of Heater	W	2452/3000
	Evaporator Form		Aluminum Fin-copper Tube
	Pipe Diameter	mm	Φ7
	Row-fin Gap	mm	3-1.4
	Coil Length (LXDXW)	mm	698X38.1X242
	Swing Motor Model		/
	Output of Swing Motor	W	/
	Fuse	A	3.15
	Sound Pressure Level (H/M/L)	dB (A)	53/52/51
	Sound Power Level (H/M/L)	dB (A)	63/62/61

Outdoor Side	Compressor Manufacturer/Trademark		RECHI PRECISION CO.,LTD
	Compressor Model		44A282AK&FEKC
	Compressor Oil		NMOC Ze-Gles RB68EP
	Compressor Type		Rotary
	L.R.A.	A	29.5
	Compressor RLA	A	5
	Compressor Power Input	W	1125
	Overload Protector		B245-140K-141H
	Throttling Method		Capillary
	Operation Temp	ºC	16~30
	Ambient Temp (Cooling)	ºC	13~46
	Ambient Temp (Heating)	ºC	≤24
	Condenser Form		Aluminum Fin-copper Tube
	Pipe Diameter	mm	Φ5
	Rows-fin Gap	mm	3-1.4
	Coil Length (LXDXW)	mm	635X34.2X343
	Fan Motor Speed	rpm	1370
	Output of Fan Motor	W	65
	Fan Motor RLA	A	0.67
	Fan Motor Capacitor	μF	2.5
	Air Flow Volume of Outdoor Side	m^3/h	/
	Fan Type		Axial-flow
	Fan Diameter	mm	Φ349
	Sound Pressure Level (H/M/L)	dB (A)	63/61/59
	Sound Power Level (H/M/L)	dB (A)	73/71/59
	Defrosting Method		/

The above data is subject to change without notice. Please refer to the nameplate of the unit.

Parameter		Unit	Value
Model			GAA09AB-D3RNA1A
Product Code			CC060027600
Power Supply	Rated Voltage	V~	208/230
	Rated Frequency	Hz	60
	Phases		1
Cooling Capacity		Btu/h	8800/9000
Heating Capacity		Btu/h	7900/8100
Cooling Power Input		W	770/800
Heating Power Input		W	700/720
Cooling Power Current		A	3.9/3.7
Heating Power Current		A	3.8/3.4
Electric Heating Power Input		W	2452/3000
Electric Heating Power Current		A	12.2/13.2
Rated Input		W	995
Rated Current		A	5.40
Air Flow Volume(H/M/L)		m^3/h	560/530/500
Dehumidifying Volume		L/h	1
EER		Btu/w.h	11.4/11.3
COP		Btu/w.h	11.25/11.25
Application Area		m^2	12-18
Climate Type			T1
Isolation			I
Moisture Protection			IP24
Permissible Excessive Operating Pressure for the Discharge Side		MPa	4.3
Permissible Excessive Operating Pressure for the Suction Side		MPa	2.5
Dimension (WXHXD)		mm	1069X406X546
Dimension of Carton Box (LXWXH)		mm	1144X645X454
Dimension of Package (LXWXH)		mm	1147X648X469
Net Weight		kg	48
Gross Weight		kg	59
Refrigerant			R410A
Refrigerant Charge		kg	0.71
Indoor Side	Fan Type		Cross-flow
	Diameter Length(DXL)	mm	Φ121X706
	Fan Motor Speed(H/M/L)	r/min	1030/970/890
	Output of Fan Motor	W	21
	Fan Motor RLA	A	0.2
	Fan Motor Capacitor	μF	1.5
	Input of Heater	W	2452/3000
	Evaporator Form		Aluminum Fin-copper Tube
	Pipe Diameter	mm	Φ7.94
	Row-fin Gap	mm	2-1.4
	Coil Length (LXDXW)	mm	699X38.1X242
	Swing Motor Model		/
	Output of Swing Motor	W	/
	Fuse	A	3.15
	Sound Pressure Level (H/M/L)	dB (A)	54/53/52
	Sound Power Level (H/M/L)	dB (A)	64/63/62

Outdoor Side	Compressor Manufacturer/Trademark		RECHI PRECISION CO.,LTD
	Compressor Model		44A202AG&F5KC
	Compressor Oil		NMOC Ze-Gles RB68EP or equivalent
	Compressor Type		Rotary
	L.R.A.	A	21
	Compressor RLA	A	3.5
	Compressor Power Input	W	785
	Overload Protector		B180-140K-241C
	Throttling Method		Capillary
	Operation Temp	ºC	16~30
	Ambient Temp (Cooling)	ºC	13~46
	Ambient Temp (Heating)	ºC	≤24
	Condenser Form		Aluminum Fin-copper Tube
	Pipe Diameter	mm	Φ5
	Rows-fin Gap	mm	3-1.4
	Coil Length (LXDXW)	mm	635X34.2X343
	Fan Motor Speed	rpm	1370
	Output of Fan Motor	W	40
	Fan Motor RLA	A	0.35
	Fan Motor Capacitor	μF	2
	Air Flow Volume of Outdoor Side	m^3/h	800
	Fan Type		Axial-flow
	Fan Diameter	mm	Φ349
	Sound Pressure Level (H/M/L)	dB (A)	66/65/64
	Sound Power Level (H/M/L)	dB (A)	76/75/74
	Defrosting Method		/

The above data is subject to change without notice. Please refer to the nameplate of the unit.

Parameter		Unit	Value
Model			GAA15AB-D3RNA1B
Product Code			CC060027700
Power Supply	Rated Voltage	V~	208/230
	Rated Frequency	Hz	60
	Phases		1
Cooling Capacity		Btu/h	14200/14500
Heating Capacity		Btu/h	13000/13300
Cooling Power Input		W	1460/1480
Heating Power Input		W	1270/1300
Cooling Power Current		A	7.5/6.7
Heating Power Current		A	6.2/5.8
Electric Heating Power Input		W	4087/5000
Electric Heating Power Current		A	20.5/21.5
Rated Input		W	2454
Rated Current		A	10.67
Air Flow Volume(H/M/L)		m^3/h	580/550/520
Dehumidifying Volume		L/h	1
EER		Btu/w.h	9.7/9.8
COP		Btu/w.h	10.24/10.24
Application Area		m^2	21-31
Climate Type			T1
Isolation			I
Moisture Protection			IP24
Permissible Excessive Operating Pressure for the Discharge Side		MPa	4.3
Permissible Excessive Operating Pressure for the Suction Side		MPa	2.5
Dimension (WXHXD)		mm	1069X406X546
Dimension of Carton Box (LXWXH)		mm	1144X645X454
Dimension of Package (LXWXH)		mm	1147X648X469
Net Weight		kg	54
Gross Weight		kg	65
Refrigerant			R410A
Refrigerant Charge		kg	1.08
Indoor Side	Fan Type		Cross-flow
	Diameter Length(DXL)	mm	Φ121X706
	Fan Motor Speed(H/M/L)	r/min	1100/1000/920
	Output of Fan Motor	W	23
	Fan Motor RLA	A	0.36
	Fan Motor Capacitor	μF	1
	Input of Heater	W	4087/5000
	Evaporator Form		Aluminum Fin-copper Tube
	Pipe Diameter	mm	Φ7.94
	Row-fin Gap	mm	3-1.4
	Coil Length (LXDXW)	mm	699X38.1X242
	Swing Motor Model		/
	Output of Swing Motor	W	/
	Fuse	A	3.15
	Sound Pressure Level (H/M/L)	dB (A)	56/55/54
	Sound Power Level (H/M/L)	dB (A)	66/65/64

Outdoor Side	Compressor Manufacturer/Trademark		ZHUHAI LANDA COMPRESSOR CO.LTD /GREE
	Compressor Model		QXA-C139rB030
	Compressor Oil		RB68EP/FVC68D
	Compressor Type		Rotary
	L.R.A.	A	36
	Compressor RLA	A	6.4
	Compressor Power Input	W	1410
	Overload Protector		Internal
	Throttling Method		Capillary
	Operation Temp	ºC	16~30
	Ambient Temp (Cooling)	ºC	13~46
	Ambient Temp (Heating)	ºC	≤24
	Condenser Form		Aluminum Fin-copper Tube
	Pipe Diameter	mm	Φ7.94
	Rows-fin Gap	mm	3-1.4
	Coil Length (LXDXW)	mm	635X57.15X352
	Fan Motor Speed	rpm	1600
	Output of Fan Motor	W	65
	Fan Motor RLA	A	0.77
	Fan Motor Capacitor	μF	2.5
	Air Flow Volume of Outdoor Side	m^3/h	1000
	Fan Type		Axial-flow
	Fan Diameter	mm	Φ349
	Sound Pressure Level (H/M/L)	dB (A)	66/65/64
	Sound Power Level (H/M/L)	dB (A)	76/75/74
	Defrosting Method		/

The above data is subject to change without notice. Please refer to the nameplate of the unit.

3. Outline Dimension Diagram

GAA07AB-D3RNB2A(CC060001800, CC060001803, CC060001805)
GAA09AB-D3RNB2A(CC060002000, CC060002003, CC060002005, CC060002007, CC060002008)
GAA12AB-D3RNB2A(CC060002200, CC060002203, CC060002205)
GAE15AB-D3RNB2A(CC060021400, CC060021401)
GAA12AB-D3RNB2B(CC060002400, CC060002403, CC060002405)
GAA15AB-D3RNB2B(CC060002600, CC060002603, CC060002605)
GAE07AB-D3RNB2A(CC060001700, CC060001703, CC060001705)
GAE09AB-D3RNB2A(CC060001900, CC060001903, CC060001905)
GAE12AB-D3RNB2A(CC060002100, CC060002103, CC060002105)
GAA15AB-D3RNB2A(CC060021500, CC060021501)
GAE12AB-D3RNB2B(CC060002300, CC060002303, CC060002305)
GAE15AB-D3RNB2B(CC060002500, CC060002503, CC060002505)
GAE07AB-D3RNB3A(CC060024000)
GAA07AB-D3RNB3A(CC060024100)
GAA15AB-D3RNB3B(CC060024200)

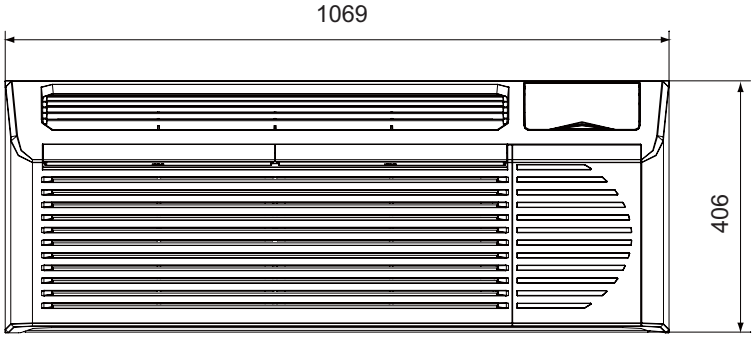

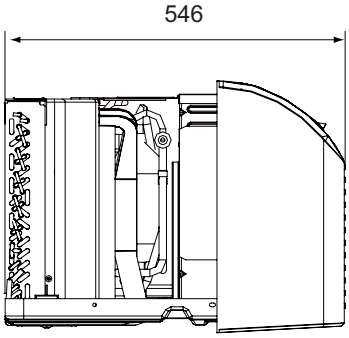

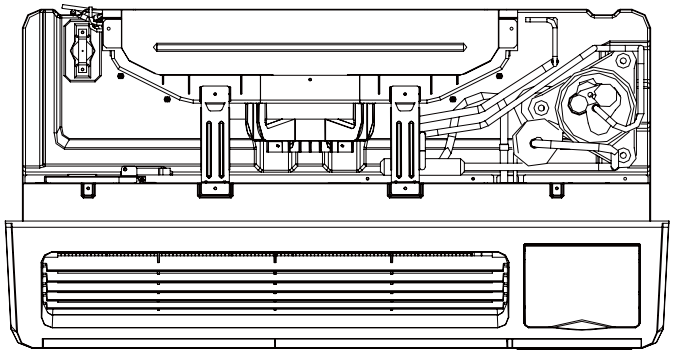

unit:mm

GAA07AB-D3RNB2A(CC060001801)
GAA09AB-D3RNB2A(CC060002001)
GAA12AB-D3RNB2A(CC060002201, CC060002206)
GAA12AB-D3RNB2B(CC060002401)
GAA15AB-D3RNB2B(CC060002601)
GAE07AB-D3RNB2A(CC060001701)
GAE09AB-D3RNB2A(CC060001901)
GAE12AB-D3RNB2A(CC060002101)
GAE12AB-D3RNB2B(CC060002301)
GAE15AB-D3RNB2B(CC060002501)

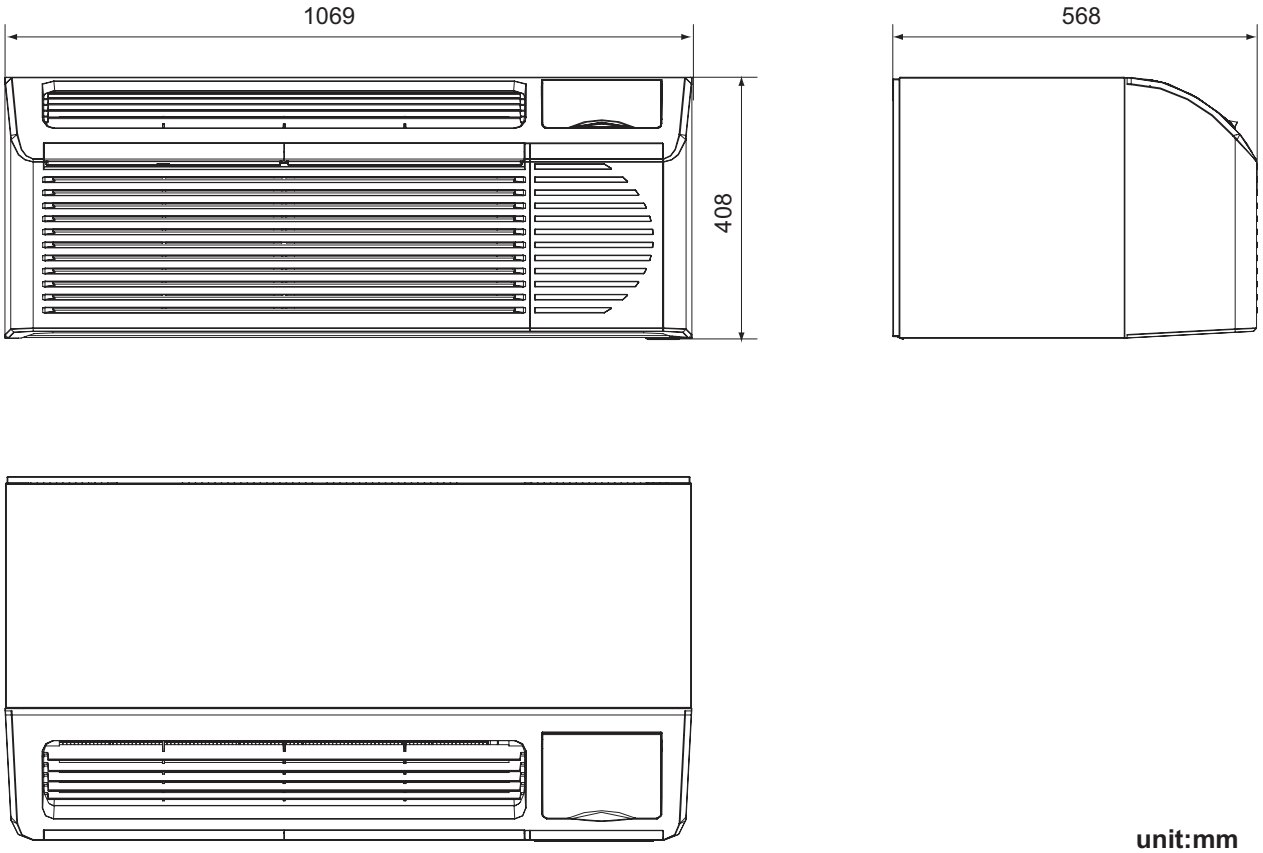

unit:mm

GAA09AB-D3RNA1A(CC060027600)
GAA15AB-D3RNA1B(CC060027700)
GAA07AB-D3RNB2A(CC060001802)
GAA09AB-D3RNB2A(CC060002002)
GAA12AB-D3RNB2A(CC060002202)
GAA12AB-D3RNB2B(CC060002402)
GAA15AB-D3RNB2B(CC060002602)
GAE07AB-D3RNB2A(CC060001702)
GAE09AB-D3RNB2A(CC060001902)
GAE12AB-D3RNB2A(CC060002102)
GAE12AB-D3RNB2B(CC060002302)
GAE15AB-D3RNB2B(CC060002502)

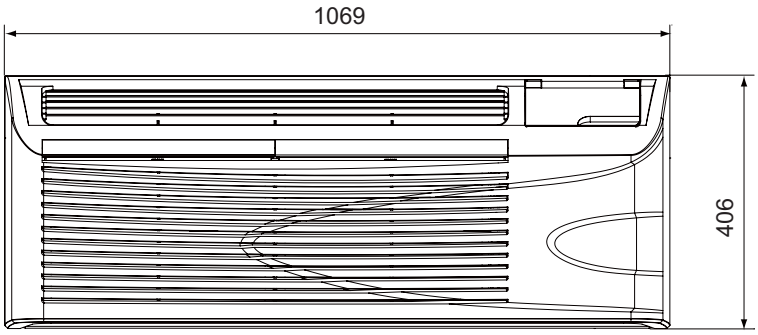

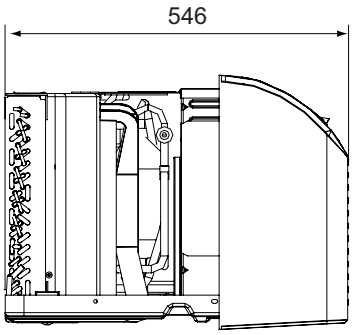

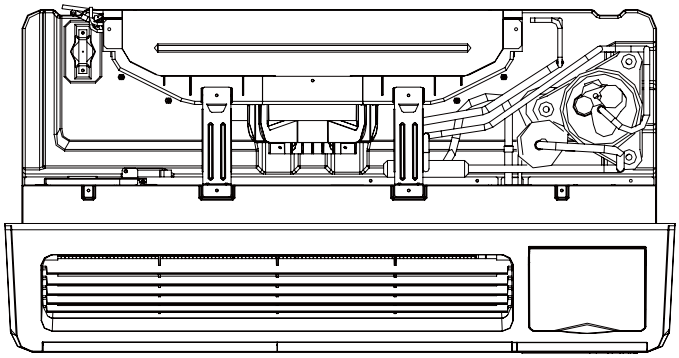

unit:mm

4. Refrigerant System Diagram

(1)Cooling + Heat Pump + Auxiliary Electric Heater

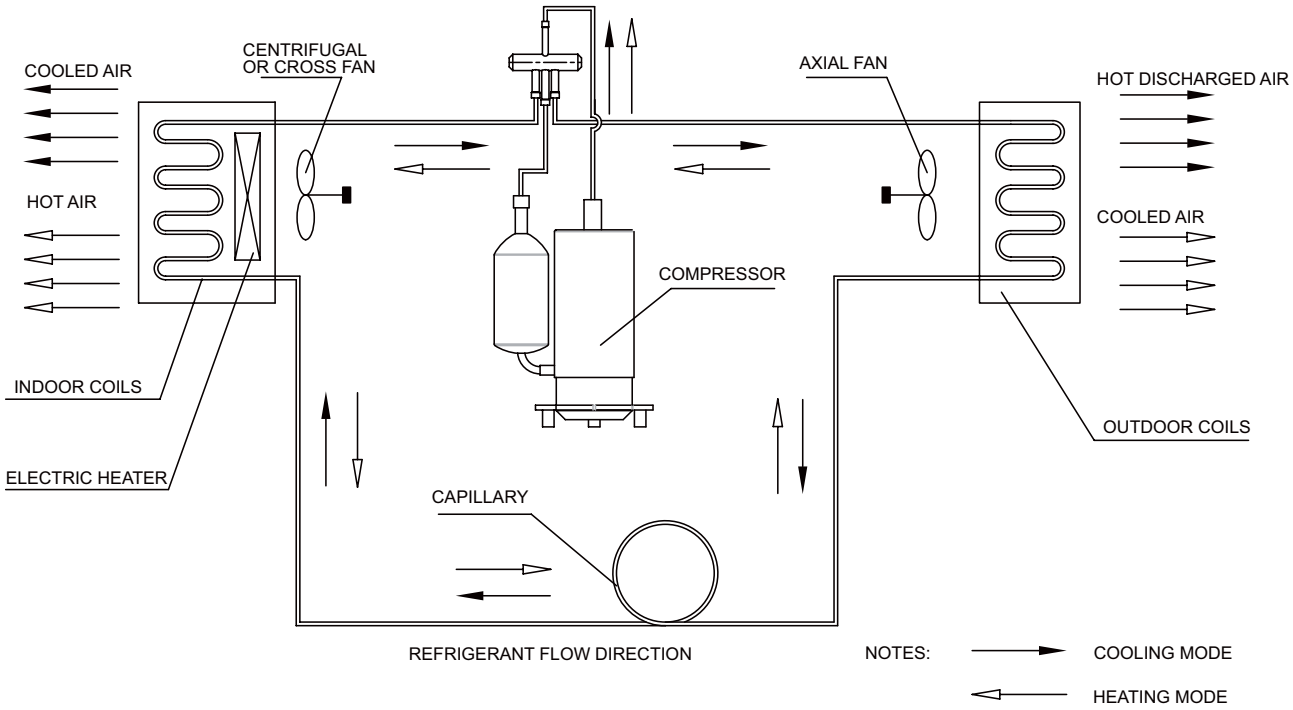

(2) Cooling + Electric Heater

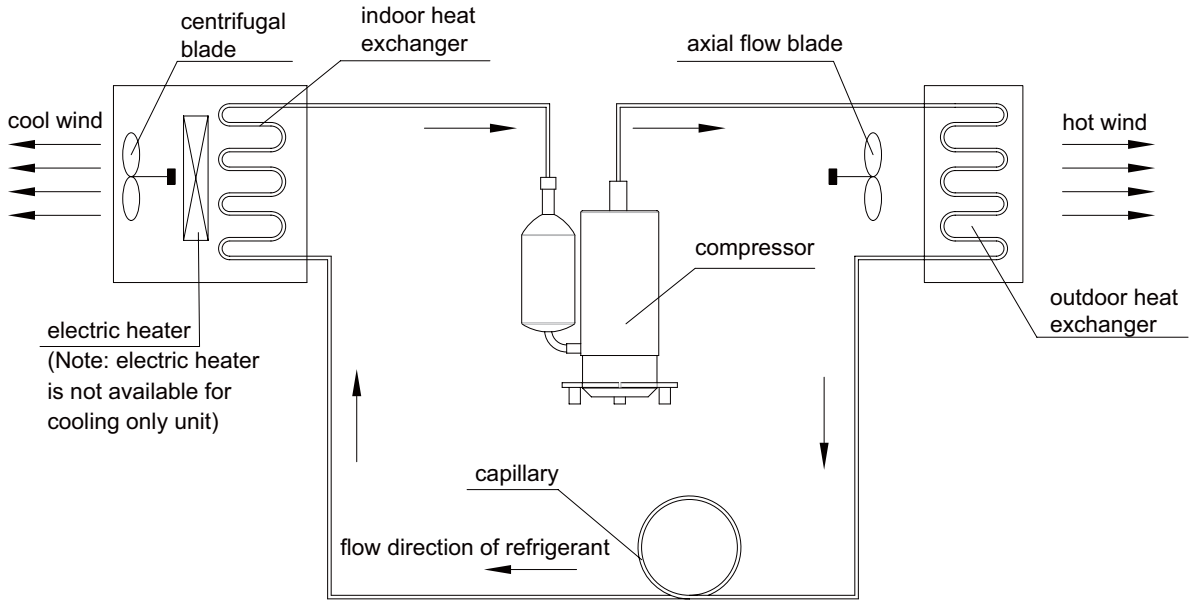

5. Electrical Part

5.1 Wiring Diagram

●Instruction

Symbol	Symbol Color	Symbol	Symbol Color	Symbol	Name
WH	White	GN	Green	CAP.	Capacitor
YE	Yellow	BN	Brown	COMP	Compressor
RD	Red	BU	Blue	⏚	Grounding wire
YEGN	Yellow-Green	BK	Black	/	/

●Electric Diagram

GAA07AB-D3RNB2A, GAA09AB-D3RNB2A, GAA12AB-D3RNB2A, GAA15AB-D3RNB2A, GAA07AB-D3RNB3A
GAA09AB-D3RNA1A, GAA15AB-D3RNA1B

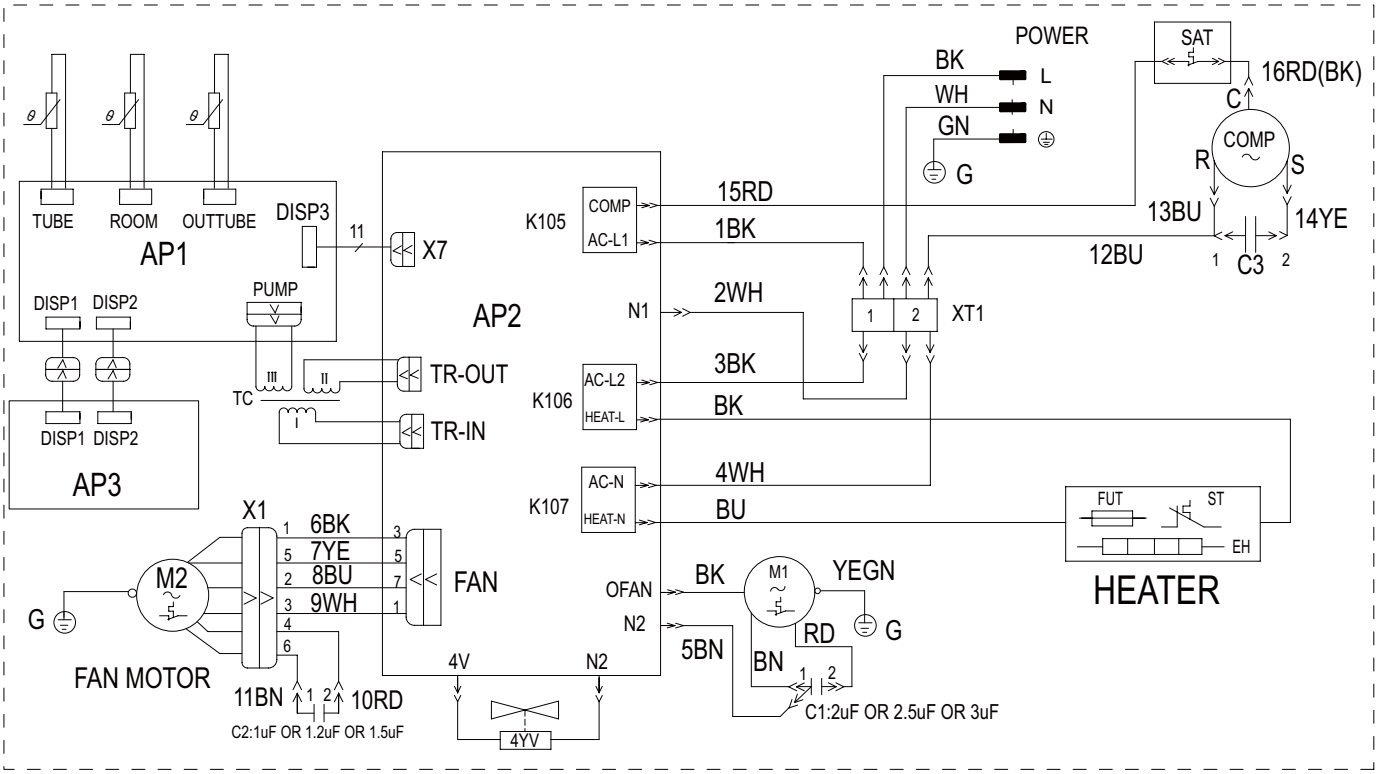

GAE07AB-D3RNB2A, GAE09AB-D3RNB2A, GAE12AB-D3RNB2A, GAE15AB-D3RNB2A, GAE07AB-D3RNB3A

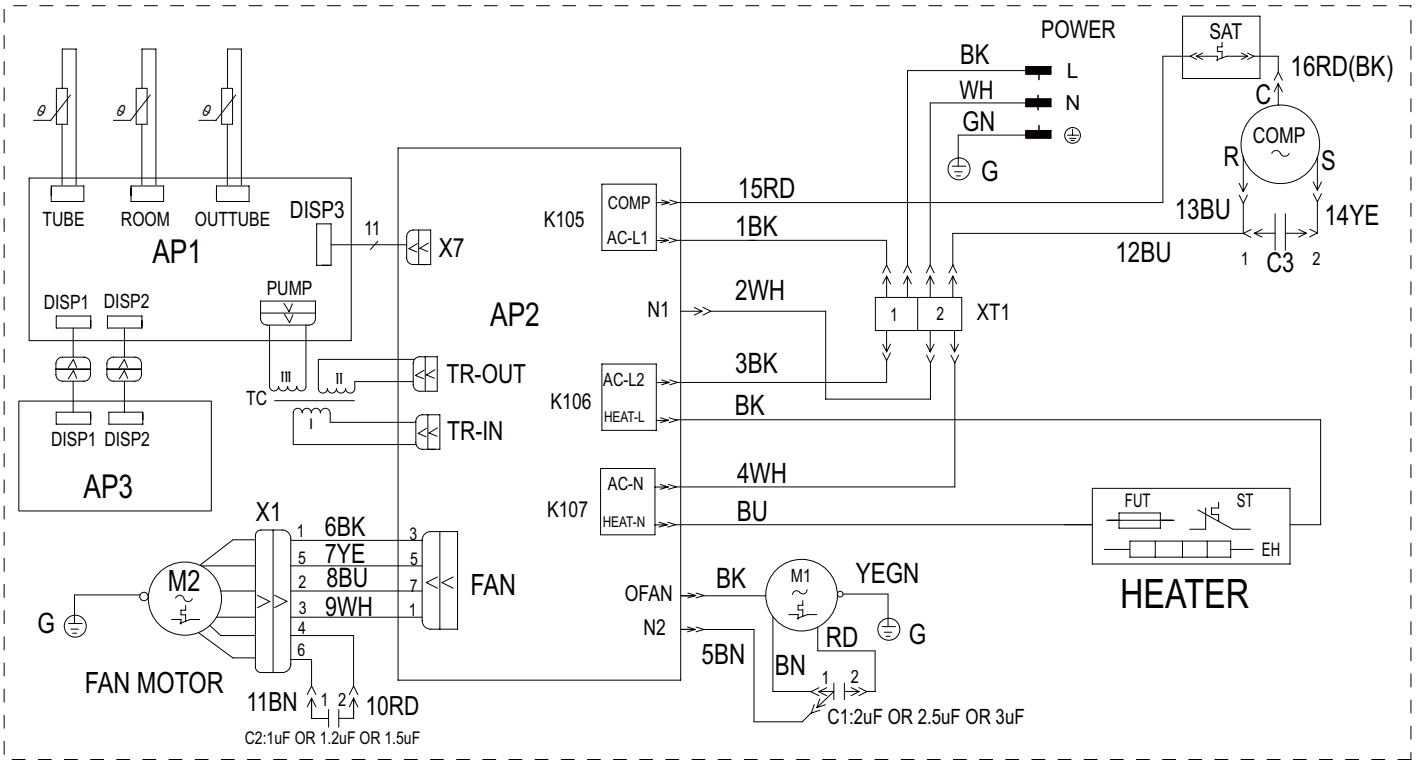

GAE12AB-D3RNB2B, GAE15AB-D3RNB2B

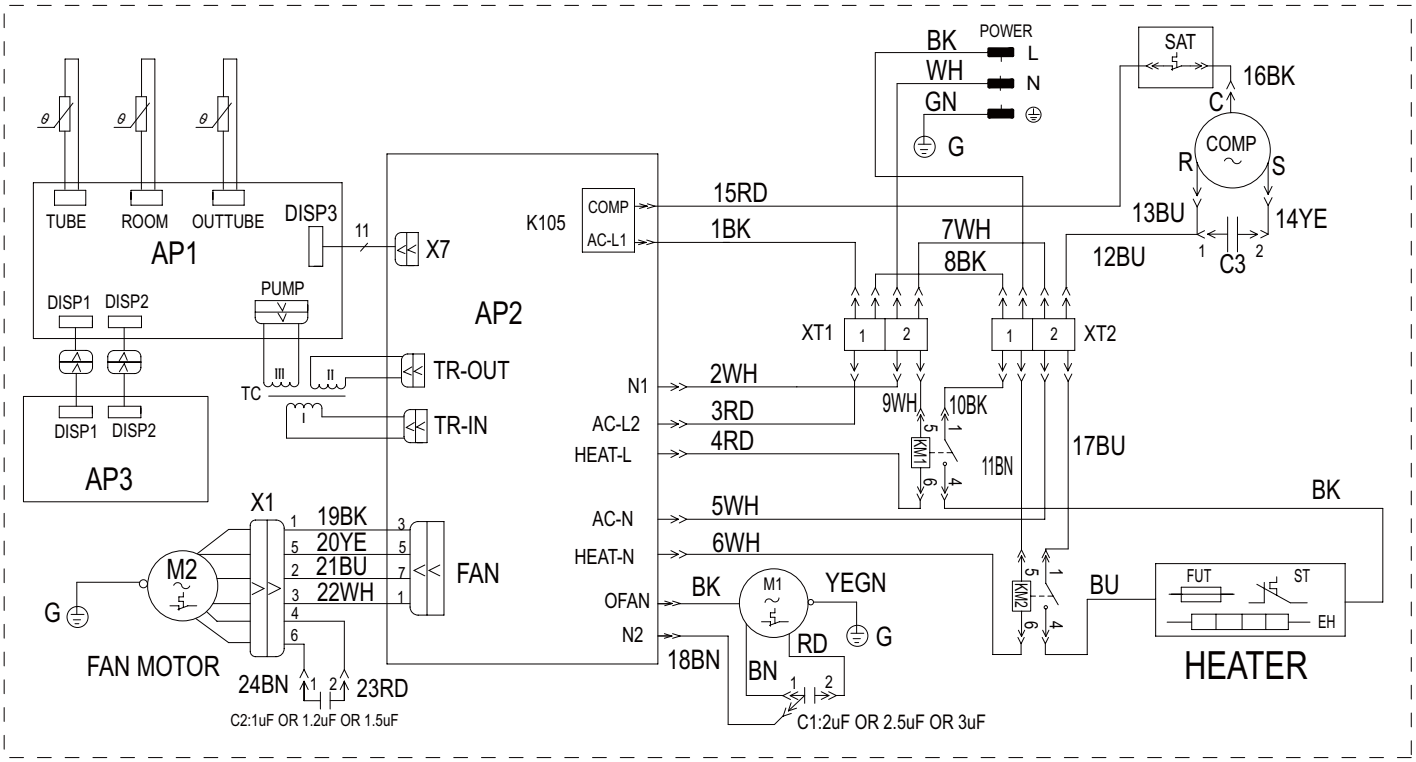

GAA12AB-D3RNB2B, GAA15AB-D3RNB2B, GAA15AB-D3RNB3B

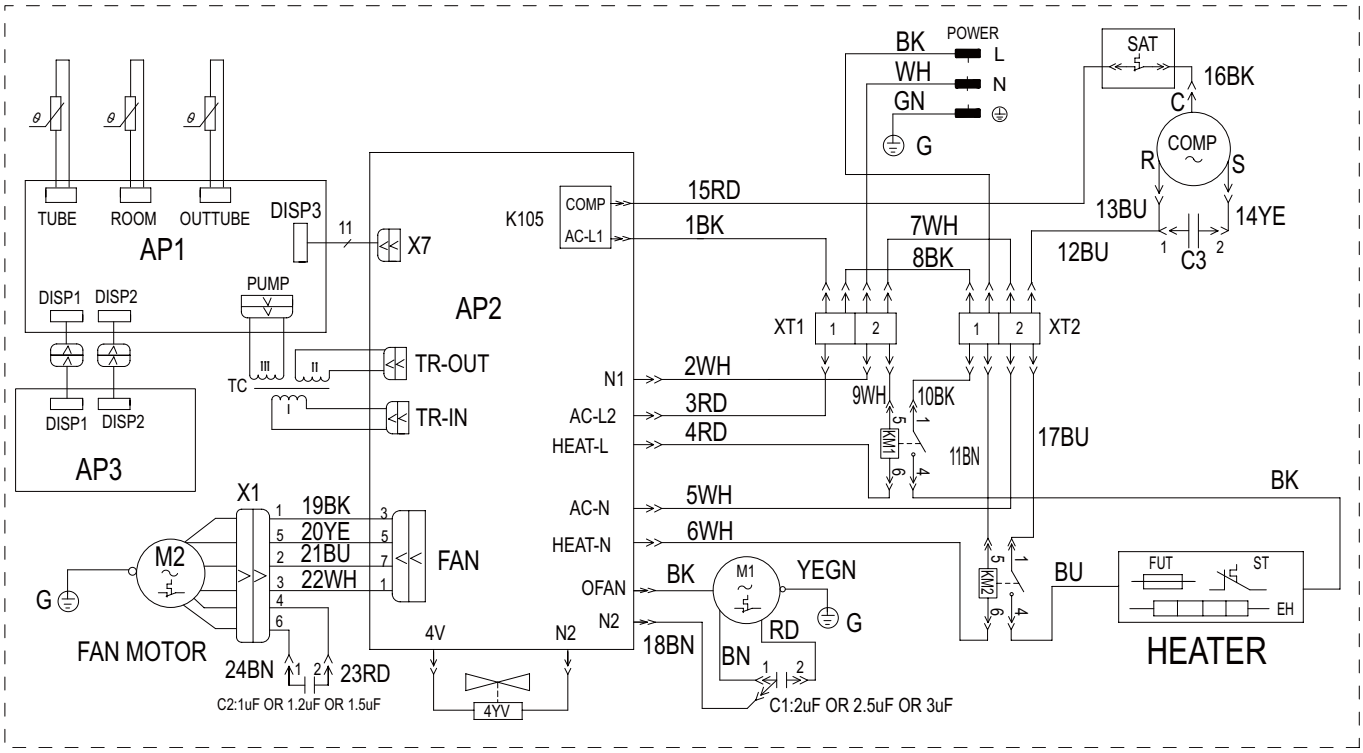

These circuit diagrames are subject to change without notice ,please refer to the one supplied with the unit.

5.2 PCB Printed Diagram

5.2.1 Silk Screen on Main Board 1

●Top View

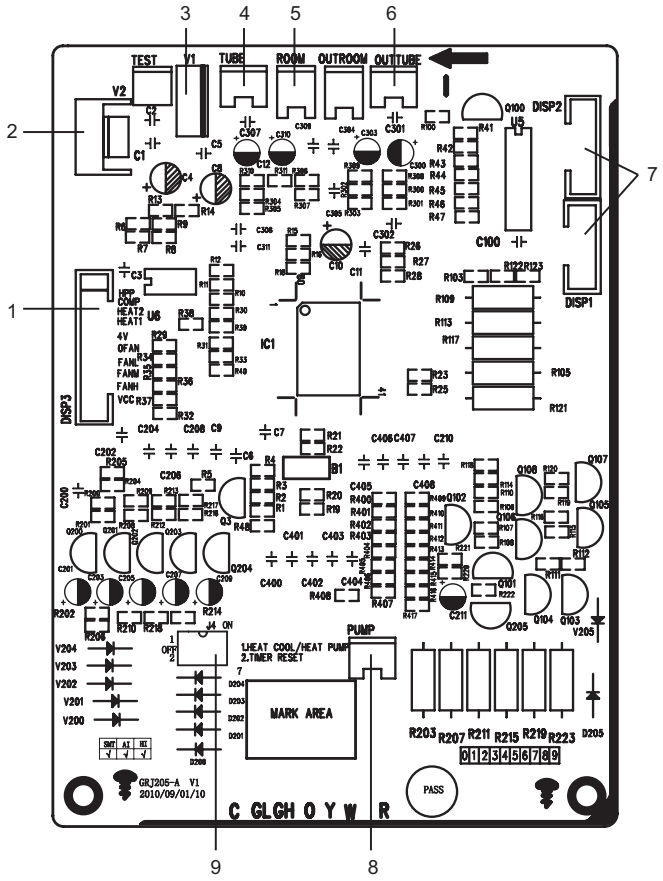

1	Interface of strong electroplax
2	7805 voltage-regulator block
3	7812 voltage-regulator block
4	Indoor tube temperature sensor
5	Indoor ambient temperature sensor
6	Outdoor tube temperature sensor
7	Interface of display
8	AC 24V voltage input
9	Selection for heat pump and pure electric heating

●Bottom View

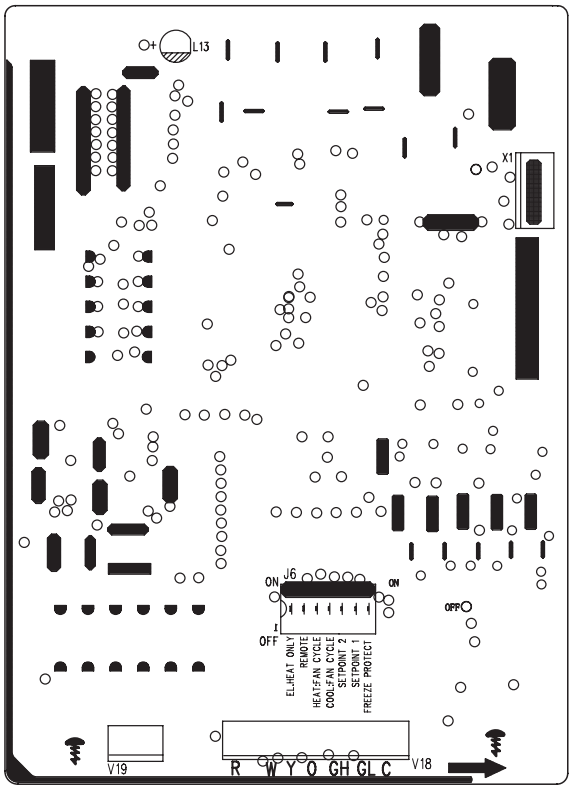

5.2.2 Silk Screen on Main Board 2

●Top View

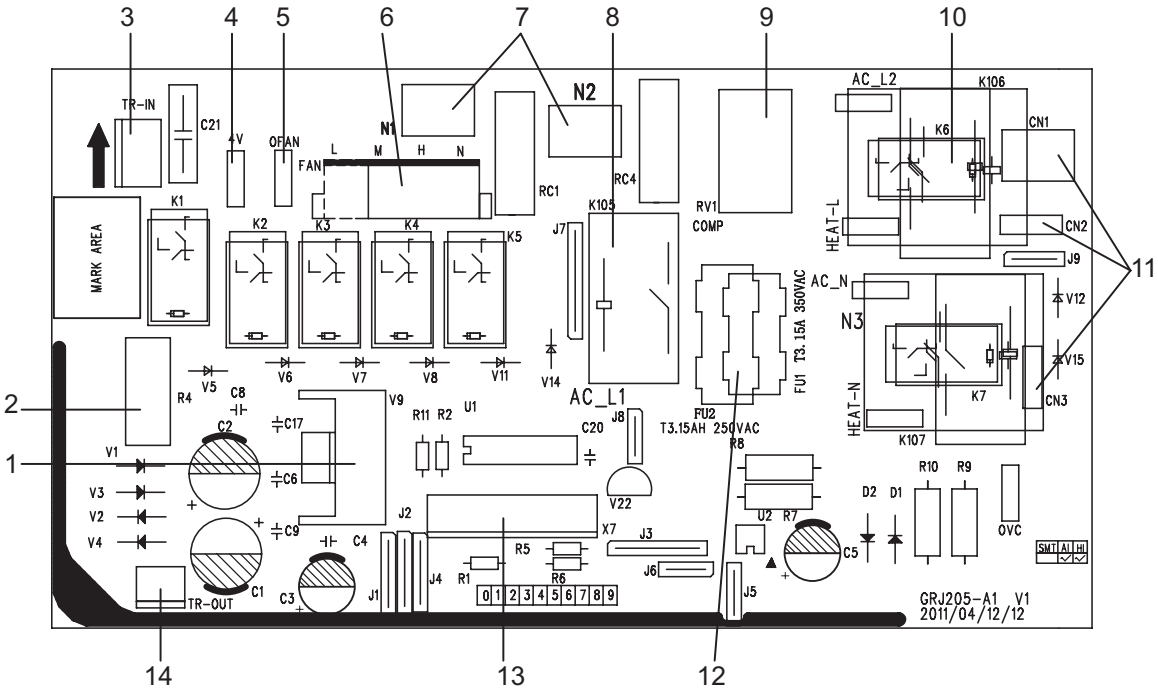

1	7805 voltage-regulator block	6	Three notches of indoor fan	11	Control interface of relay
2	PTC resistance	7	Neutral wire	12	Fuse
3	220V connector of transformer	8	Relay of compressor	13	Interface of main board
4	4-way valve	9	Explosion-proof piezoresistor	14	Output terminal 24V of transformer
5	Outdoor fan	10	Relay of electric heating	/	/

●Bottom View

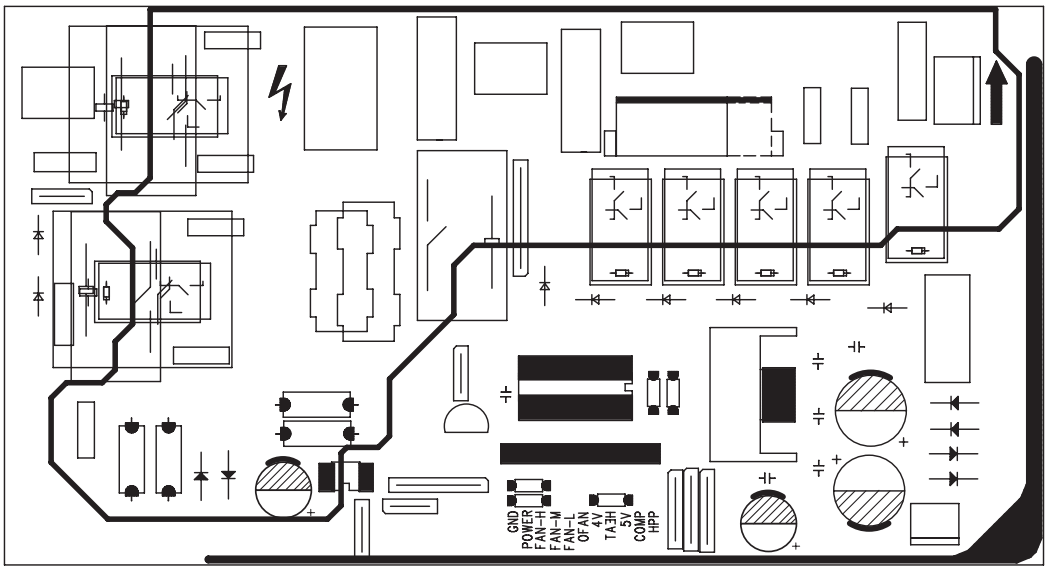

5.2.3 Silk Screen on Display Board

●Top View

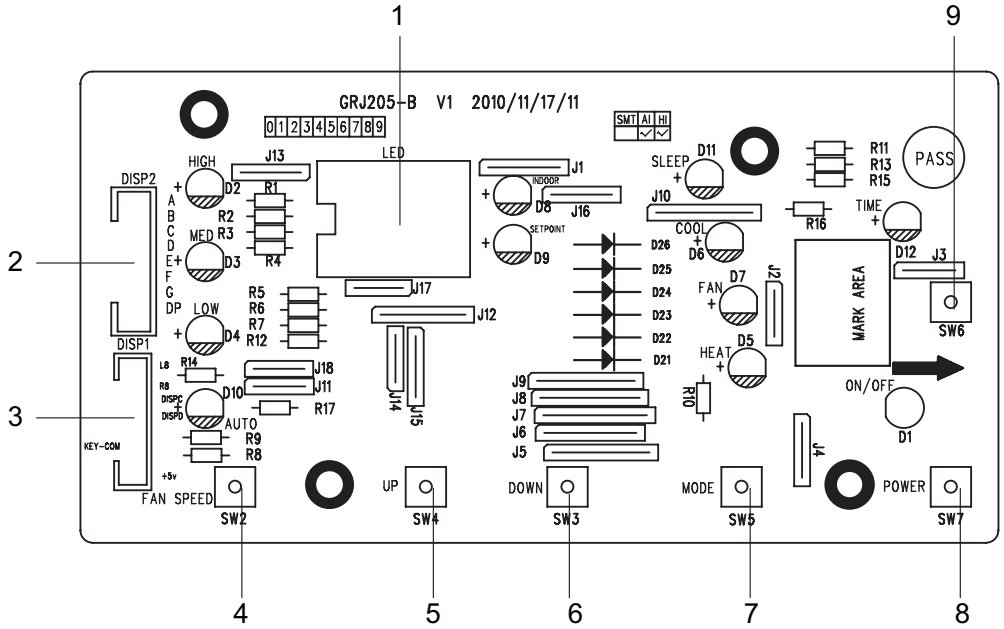

1	7805 voltage-regulator block	4	Three notches of indoor fan	7	Control interface of relay
2	PTC resistance	5	Neutral wire	8	Fuse
3	220V connector of transformer	6	Relay of compressor	9	Interface of main board

●Bottom View

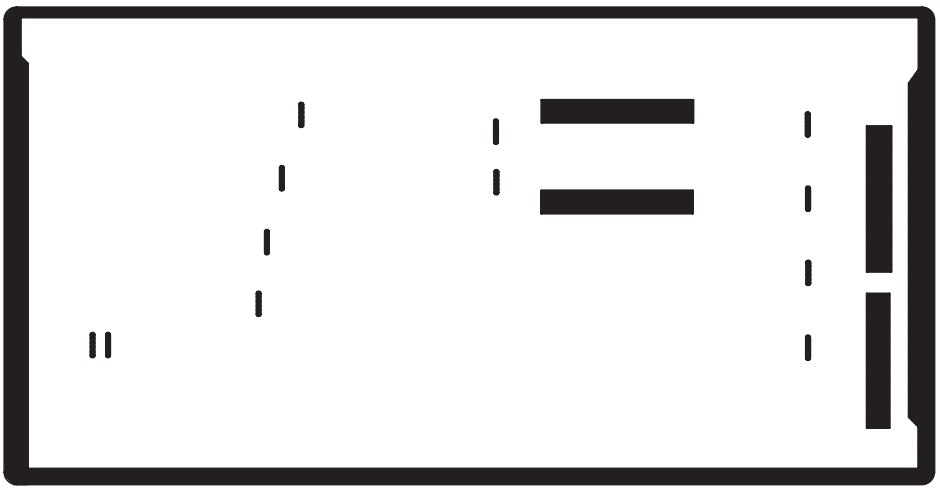

6. Function and Control

After putting through the power, air conditioner will give out a sound and indicators on control panel will be on. After that, you operate the air conditioner through remote controller or control panel.

6.1 Introduction of Control Panel

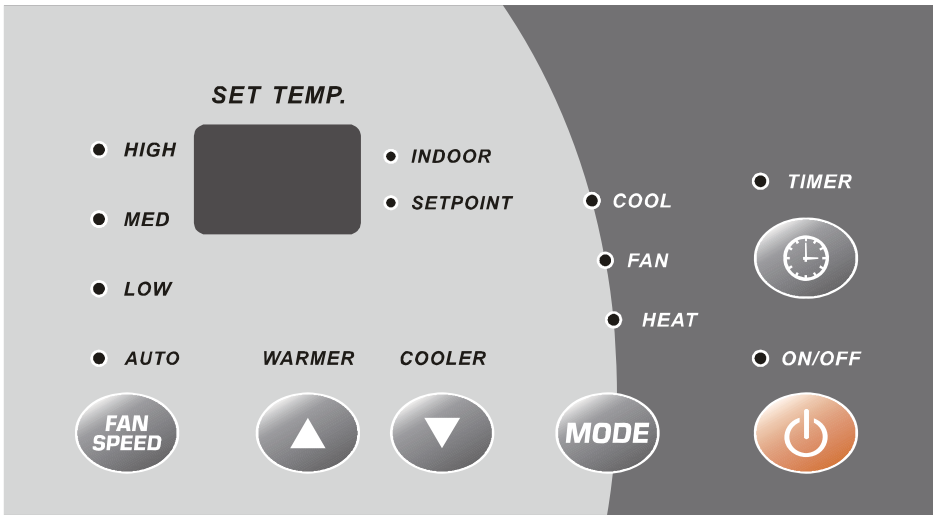

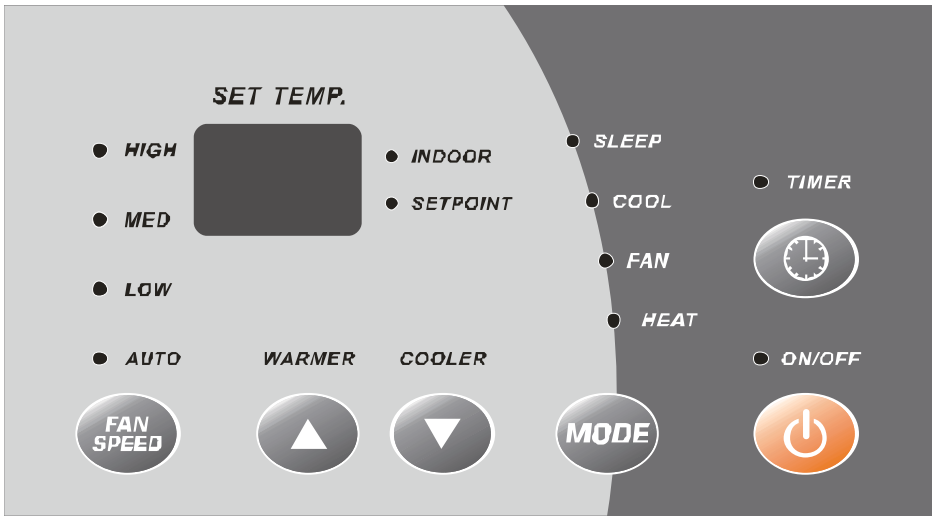

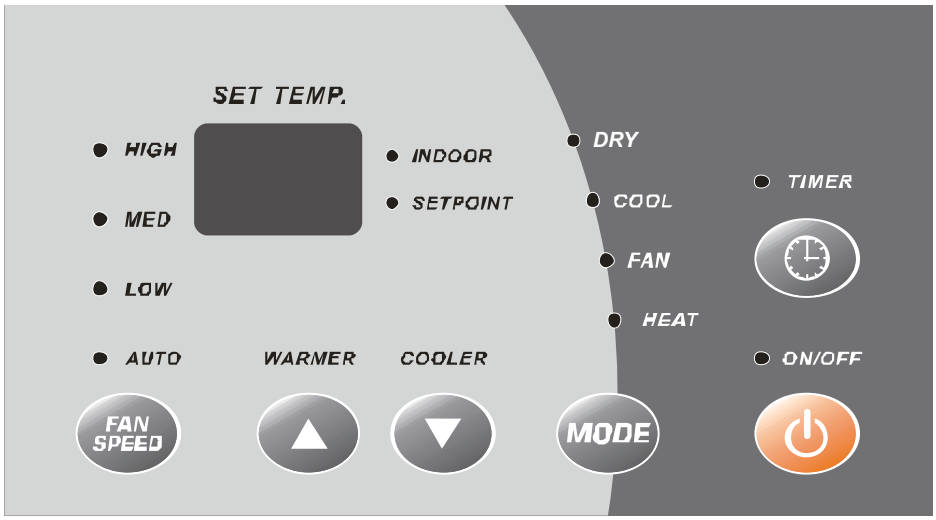

ABOUT THE CONTROLS ON YOUR UNIT

There are ON/OFF, WARMER, COOLER, MODE, FAN SPEED and TIMER six buttons in all;

1. Press ON/OFF button under OFF mode to turn on the unit. If press WARDMER or COOLER button under OFF mode, the dual 8 nixie tube will display indoor temperature for 15s and then turn off. If press MODE button under OFF mode, the controller will resume to the operation status before power-off. Operation indicator is in green.

2. Under ON status, every button is in valid

(1) ON/OFF: It is used for turning OFF the system.

(2) MODE: It is used for switching between Cool, Fan, Heat and Dry (optional).

(3) WARMER or COOLER: 1. It is used for increasing temperature or timer setting
2. It is used for decreasing temperature or timer setting.

(4) FAN:It is used for setting high, medium, low or auto fan speed. The corresponding LED will be on.

(5) TIMER:It is used for setting timer function

3. Timer function: It can be set either by buttons on control panel or by remote controller

(1) Timer ON: When the unit is off, timer ON can be set. Setting range is 0.5~24h. When timer ON time is reached, the system will operate according to the set mode.

(2) Timer OFF: When the unit is off, timer OFF can be set. Setting range is 0.5~24h. When timer OFF time is reached, the system will stop operation.

(3) Timer Setting: Press TIMER button to set timer function and Timer icon will be on. Dual 8 nixie tube will display selected time which can be adjusted by pressing “+”or“-”buttons. The range of timer setting is from “--” to 24h. 5s after timer setting, the timer function will be activated and TIMER LED will be on. If “--” is displayed, the system will stop timer setting.

(4) Timer Preview: when timer function has been set, press TIMER button to preview the remaining time of timer.

(5) If Timer function has been set, turning on/off the unit or power failure will cancel timer setting.

4. Sleep function: This function can be set only by remote controller. This mode will bring a more comfortable sleeping environment. Please contact customer service center or refer to the service manual for more details.

5. DRY function: Without reducing the room temp. , air conditioner can dehumidify and make the room air dry and comfortable.

6. Buzzer: optional

When controller is energized, or valid remote control signal/ button signal is received, the buzzer will give out a beep.

7. Auto fan speed

Fan speed can be automatically selected according to different modes or indoor temperature to achieve higher comfort.

8. Emergency cooling operation: Emergency cooling, Subject to your choice – allowed or rejected).

When indoor ambient temperature ≥30°C, the unit will start cooling automatically. When indoor ambient temperature reaches 27°C, the unit will stop operation.

9. F code remote controller: optional

6.2 Function Introduction

1. Basic function of system

1.1 Cooling mode (4-way valve is de-energized)

Under cooling mode, cooling mode indicator is ON and all the fan speed indicator is ON. Nixie tube displays set temperature and SETOPINT is ON.

1.1.1 Working condition and process for cooling

a. When Tindoor amb.+Tindoor amb. compendation≥Tpreset+2°F(1°C), the unit operates under cooling. Outdoor fan and indoor fan operates. Compressor will operates 10s later.

b. Tindoor amb.+Tindoor amb. compendation≤Tpreset-2°F(1°C), the unit sops operation. Compressor and outdoor fan stop operation. Under fan cycle mode, indoor fan will stop operation after operating at set fan speed for 60s (except requiring the indoor fan to operate in protection mode); if fan cycle mode is not selected, indoor fan will operate in set fan speed.

c. WhenTpreset-2°F(1°C)<Tindoor amb.+Tindoor amb. compendation<Tpreset+2°F(1°C), the unit keeps previous operation status.

1.1.2 Under this mode, nixie tube displays set temperature. The temperature setting and display range is 61-86°F(16-30°C); the actual operation temperature range of controller is 61-86°F(16-30°C); 63-80°F(18-28°C), 65-78°F(19-26°C), 68-75°F(20-24°C) can be selected by dial switch. (More details refer to special function)

1.2 Fan mode

Under this mode, fan mode indicator is ON and compressor stops operation. Temperature cant be adjusted (WARMER,COOLER button are invalid). Indoor fan can operate at high, middle or low speed. Nixie tube displays ambient temperature (display range is 0°C-50°C or 32°F-122°F). Indoor indicator is ON. The default mode of first energization (memory chip is empty) is fan mode; default fan speed is middle. If exceeding the display range, min value or max value is displayed.

1.3 Heating mode

Under heating mode, heating mode LED and set fan speed LED is ON. Nixie tube displays set temperature. If select to display ambient temperature in the fifth mode of 6.5 configuration mode, it will display as the way is this mode. The temperature and fan speed will keep the same when changing from button setting to mode setting.

1.3.1 Working status

1.3.1.1 General type HEAT PUMP TYPE

Operation condition and process (electric heating and compressor cant operate at the same time)

a. When Tpreset-5°F(3°C)<Tindoor amb.-Tindoor amb. compensation≤Tpreset-2°F(1°C), compressor operates at heating mode. Meanwhile, 4-way valve, indoor fan and outdoor fan start operation. Compressor can operate after 10s. If compressor operates and it satisfies Tindoor amb.-Tindoor amb. compensation≤Tpreset-5°F(3°C) and the minimum operation time for compressor, compressor and outdoor fan stop operation immediately. 1s later, electric heater will start. Once the electric heating operates, it will quite until is satisfied condition b (enter into protection function is excluded). When it needs to heat, if compressor cant be started up due to protection function, electric heating will start heating instead of compressor 15s later. It will stop operation until satisfying the temperature point. (customized requirement); When Tindoor amb.-Tindoor amb. compensation≤Tpreset-5°F(3°C), the electric heating operates. Indoor fan operates at set fan speed.

b. When Tindoor amb.-Tindoor amb. compensation≥Tpreset+2°F(1°C), compressor or electric heating stops operation. Under fan cycle mode, indoor fan operates at the condition of blowing residual heat; if fan cycle mode is not selected, indoor fan will operate in set fan speed.

c. When Tpreset-2°F(1°C)<Tindoor amb.-Tindoor amb. compensation<Tpreset+2°F(1°C), the unit keeps previous operation status.

1.3.1.2 Pure electric heating type HEAT COOL TYPE

Operation condition and process

a. When Tindoor amb-Tindoor amb. compensation≤Tpreset-2°F(1°C), the electric heating starts operation and indoor fan operates at set fan speed;

b. When Tindoor amb.-Tindoor amb. compensation≥Tpreset+2°F(1°C), the electric heating stop operation. Under fan cycle mode, indoor fan operates at the condition of blowing residual heat; if fan cycle mode is not selected, indoor fan will operate in set fan speed.

c. WhenTpreset-2°F(1°C)<Tindoor amb-Tindoor amb. compensation<Tpreset+2°F(1°C), the unit operates at previous operation status.

1.4 OFF mode

If the OFF mode is selected, all the display will be closed except the power indicator and all the output are invalid. (Except the low temperature protection). If press the WARMER or COOLER button, the dual 8 nixie tube will extinguish after it displayed the ambient temperature for 15s and the INDOOR indicator will also go out after brighting for 15s. If repressing the WARMER or COOLER button in the process of displaying the ambient temperature, 15s later, it will be calculated again.

1.5 Low temperature protection

在关闭模式（包括能源管理关机），制冷、除湿（可选）、送风模式、手操器模式下有效 .

Entry condition: if select low temperature protection valid with dial switch (see special function), if it detects that the indoor ambient temperature is lower than 40°F(5°C),air conditioner will enter into pure electric heating mode; low temperature protection will be started up.

Exit condition: when indoor ambient temperature is increase more than 50°F(10°C), low temperature protection will be stopped;

2. Users interface display and button

2.1 Button function:

There are ON/OFF, WARMER, COOLER, MODE, FAN SPEED, TIMER six buttons in all;

2.1.1 In OFF mode, press the ON/OFF button to turn on the unit: In OFF mode, if pressed the WARMER or COOLER button, the “dual 8” will be turned off after displaying the indoor temperature for 15s; If pressing the MODE button in OFF mode, the controller will resume to the running status before turning off the unit. The running LED is displaying in green color.

2.1.2 In ON status, all the buttons are in valid.

1) ON/OFF: After pressing the ON/OFF button, the unit can be switched between ON and OFF mode.

2) MODE: 在开机时，按下 MODE 键可以在除湿（可选）、制冷、送风和制热间循环切换；在关闭模式下，按下 MODE 键，则控制器按关闭前的状态运行 .

3) FAN SPEED: In ON status, after pressing the FAN SPEED button, you can select the low, medium, high and auto fan speed.

4) WARMER, COOLER:

a. In TIMER setting status, the timer can be set within 0-24 hours. In 10 hour timer, the time is adjusted every 0.5 hour by pressing the button. In timer above 10 hour, the time is adjusted every 1 hour by pressing the button.

b. In temperature setting status, the temperature can be adjusted every 2°F (1°C). Temperature setting range is 61-86°F (16-30°C) and you can also select other setting temperature range through configuration.

5) TIMER:

a. In the status without timer, it will enter timer setting by pressing this button.

b. In the status with timer, it can show the residual time by pressing this button.

c. Press this button to cancel timer when showing the time or setting timer.

2.2 Dual 8 Display and LED Display

两个 8 段数码管，13 个 LED 指示灯（分别为 HIGH，MED，LOW，AUTO, DRY 或 SLEEP（可选），COOL ，FAN，HEAT，ON/OFF、 SETOPINT（设定温度），INDOOR（环境温度），STATUS（主板上状态指示灯），TIMER）

2.2.1 Mode LED display: when the A/C is running in a certain kind of mode, the corresponding LED is bight.

2.2.2 Running/power LED: In ON status, the controller is in green color; In OFF status, the controller is red color.

2.2.3 Fan speed display: when the A/C is running at high, medium, low and auto fan speed, the corresponding LED is bright.

2.2.4 Dual 8 display: In cooling and heating mode, it is default to the display the setting temperature (In fan mode, it displays the indoor ambient temperature).

2.2.5 When the display data has three-position, the dual 8 is rolling to display. Display the “decimal” +“units place” at first, and then display “BLANK”+ “hundreds place”

2.2.6 Malfunction Display

After energization, STATUS LED is bright, while when theres malfunction or protection, STATUS LED will blink to display in any circumstances.

The details are as below: priority is decreasing from 1 to 8.

In OFF mode, dual 8 wont display the error code (except the low temperature protection), and number 6, 7 protection marks will be eliminated. When multiple protections are overlapped, it activates only the protection with the highest priority.

1	Indoor ambient temperature sensor is open circuit and short circuit	Dual 8 displays "F1", STATUS LED blinks once and goes out for 3s circularly.
2	Indoor tube temperature sensor is open circuit and short circuit	Dual 8 displays "F2",STATUS LED blinks twice and goes out for 3s circularly.
3	Outdoor tube temperature sensor is open circuit and short circuit	Dual 8 displays "F4", STATUSLED blinks 4 times and goes out for3s circularly.
4	Low temperature protection	Dual 8 displays “FP”
5	Wrong wire connection for wired controller	STATUS LED blinks9 times and goes out for3s circularly.
6	High temperature protection for evaporator	STATUS LED blinks8 times and goes out for3s circularly.
7	High temperature protection for outdoor condenser	STATUS LED blinks6 times and goes out for3s circularly.
8	Freeze protection for evaporator	STATUS LED blinks5 times and goes out for3s circularly.
9	Frost protection(heat pump)	STATUS LED blinks7 times and goes out for3s circularly.

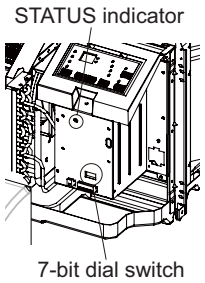

3. Configuration that is easy for hotel personnel to repair (7 DIP switch, the configuration is valid only after power failure)

A. EL. HEAT ONLY (only electric heating) (valid in wired control mode, panel and remote controller)
ON-only electric heating; OFF-normal heating mode; default-OFF, this function is only applicable to HEAT PUMP
B. REMOTE (wired controller control)
ON-wired controller control is valid; OFF-panel control is valid; default-OFF
C. FAN CYCLE FOR HEAT (invalid in panel, remote controller, and wired controller mode)
ON-fan is constantly running; OFF-fan will be stopped according to the loads (HEAT, COMP); default-OFF (After putting through the wired controller, the fan speed is controlled by the wired controller. .Whether it runs or not, which is controlled by the controller.)
D. FAN CYCLE for COOL (invalid in panel, remote controller and wired controller mode)
ON-fan will be stopped according to the loads (HEAT. COMP); OFF-fan is constantly running; default-OFF (After putting though the wired controller, the fan is controller by the wired controller)
E. SETPOINT (SETPOINT1, SETPOINT2) (valid in panel, remote controller mode and invalid in wired controller mode)
OFF OFF-(61-86°F) (16-30°C);
ON OFF-(63-80°F) (18-28°C);
OFF ON-(65-78°F) (19-26°C);
ON ON-(68-75°F) (20-24°C);
Default-(61-86°F) (16-30°C)
If the display value of dual 8 exceeds the set point temperature limit, the display range is also 61~86°F(16-30°C); The actual working temperature range for the controller is the range of set point temperature limit.
F. Freeze protection is prohibited (valid in wired controller, panel and remote controller mode)
ON-shield; OFF-valid; default—OFF

4.Configuration that isnt needed the hotel maintenance personnel to control (configuration is valid after B dial-up is energized, while configuration is invalid after A dial-up is energized)

A. Heat pump and Heat Cool units for selection. (Heat Pump is electric heating + heat pump; Heat Cool is electric heating + cooling only)
Heat pump—ON;
Heat cool-OFF
Heat pump units should be equipped with Heat pump type wired controller.
Heat Cool units should be equipped with Heat Cool type wired controller.
B. Neglect for time delay (TIMER RESET)
When the dial-up is activated for once (from OFF to ON, or from ON to OFF), it will weaken all the current delay timer (once) (eg, the compressors min stop time, compressors min running time, electric heating min stop time). After validation, if the dial-up has no action, all the delay will resume normal. The specific delay time is as below:
Electric heating minimum OFF time----------1s
Compressor minimum stop time----------9s
Compressor minimum running time----------9s
Four-way valve delays for 2mins----------6s (available when the compressor is required)

5. Configuration mode

After the unit is turned on for 30s, press the fan speed button and the COOLER button for 5s, the configuration mode will be started up. After turning to the configuration mode, if adjusting the temperature offset by buttons to turn to switching condition, the load will be activated after 3s. While if turning to switching condition due to the change of the ambient temperature, it can be activated only after quitting the configuration mode. In the configuration mode, the five/six configuration modes as below can be selected by FAN SPEED button.
无除湿功能机型的 5 种配置模式：
Mode one: Fahrenheit /Centigrade display mode
Fahrenheit and Centigrade display mode can be switched by pressing WARMER or COOLER button.
F indicates Fahrenheit display mode
C indicated Centigrade display mode
Mode two: Adjusting mode for cooling temperature offset
WARMER button can increase offset fset temperature 1°F(or °C). while COOLER button can decrease offset temperature 1°F(or °C).
The indoor ambient temperature offset adjusting range is -6 to +6°F(-3 to +3°C) (cooling mode LED is bright)
Mode three: Adjusting mode for heating temperature offset
WARMER button can increase offset temperature 1°F(or °C), while COOLER button can decrease offset temperature 1°F(or °C). The

indoor ambient temperature offset adjusting range is -6 to +6°F(-3 to +3 °C) (heating mode LED is bright)
The temperature offset is default 0 in cooling and heating mode. They can allocate different offset in cooling and heating mode respectively. The offset cant be adjusted in fan mode.
Mode four: Display switchover between setting temperature and ambient temperature in heating and cooling mode;
Press the WARMER button or COOLER button to switch the setting temperature and ambient temperature displaying;
Setting temperature displaying: the dual 8 displays SP. After quitting configuration mode, the heating mode and the cooling mode display the set temperature constantly;
Ambient temperature displaying: dual 8 displays AA. After quitting the configuration mode, the heating mode and the cooling mode display the ambient temperature.
As for below circumstances, it will display set temperature for 10s and then turn to display ambient temperature. (Note: if ambient temperature displaying is set, when turn on the unit in cooling mode or heating mode, timer will be displayed for 5s, then turn to display set temperature for 5s and then turn to display ambient temperature.)
a. Press mode button
b. Energization after power failure
c. Restart the unit
d. Turn on the unit after EM turn off unit
e. Adjust the set temperature by WARMER OR COOLER button
Mode five: switchover between allowing emergent cooling auto start-up and not allowing emergent cooling auto start-up.
Press WARMER OR COOLING to switchover between allowing emergent cooling auto start-up and not allowing emergent cooling auto start-up.
Allowing emergent cooling auto start-up: dual 8 displays CA.
Not allowing emergent cooling auto start-up: dual 8 displays Cd.
有除湿功能机型的 6 种配置模式：
第一种模式：华氏 / 摄氏显示模式
按下温度加（WARMER）或 温度减（COOLER）就能切换华氏 / 摄氏显示模式。
F 表示华氏显示模式
C 表示摄氏显示模式
第二种模式：除湿温度补偿值调节模式
温度加（WARMER）能提高，温度减（COOLER）能降低补偿温度 1° F（或° C）。室内环境温度补偿值的调节范围是 －6 到 +6 ℉（-3 到 +3℃）（除湿模式 LED 亮）
第三种模式：制冷温度补偿值调节模式
温度加（WARMER）能提高，温度减（COOLER）能降低补偿温度 1° F（或° C）。室内环境温度补偿值的调节范围是 －6 到 +6 ℉（-3 到 +3℃）（制冷模式 LED 亮）
第四种模式：制热温度补偿值调节模式
温度加（WARMER）能提高，温度减（COOLER）能降低补偿温度 1° F（或° C）。室内环境温度补偿值的调节范围是 －6 到 +6 ℉（-3 到 +3℃）（制热模式 LED 亮）
除湿、制冷和制热模式下的温度补偿默认为 0，可以分别在除湿、制冷和制热模式下配置不同的补偿值，送风模式下不可调整补偿值。
第五模式：除湿、制冷和制热模式下设定温度和环境温度显示的显示切换
按下温度加（WARMER）或 温度减（COOLER）切换设定温度或环境温度显示
设定温度显示：双 8 显示 SP，退出配置模式后，除湿、制冷和制热模式始终显示设定温度；
环境温度显示：双 8 显示 AA，退出配置模式后，除湿、制冷和制热模式显示环境温度，
以下几种情况：会显示设定温度 10s，然后再显示环境温度。
备注：如果配置成显示环境温度，在开机，除湿模式、制冷模式或者制热模式，收到有定时的遥控信号时，定时时间先显示 5 秒后再显示设定温度 5 秒，然后再显示环境温度。
1. 按下模式按键
2. 断电上电
3. 关机再开机
4. EM 关机再开机
5. 用温度加、温度减键调节设定温度
第六模式：允许紧急制冷自动开启和不允许紧急制冷自动开启的切换
按下温度加（WARMER）或 温度减（COOLER）切换允许紧急制冷自动开启和不允许紧急制冷自动开启显示
允许紧急制冷自动开启：双 8 显示 CA
不允许紧急制冷自动开启：双 8 显示 Cd
Method for quitting configuration mode: as for the above configuration modes, they will be quitted by pressing the mode button or when there is no action within 30s.

Memory function

Energizing after power failure, the controller is running according to the status before power failure.

Restore factory settings

In standby and OFF status, after pressing “fan speed” + ”WARMER” for 3s and the dual 8 displays “00” for 3s (do not display others), it shows that the factory settings has been restored. Meanwhile, the configuration information is default to display.

Fahrenheit and not allow emergent cooling auto start-up. Heating offset and cooling offset is 0 and the set temperature is displayed. T value is 0, the fan speed is medium, the set temperature is 71°F and timer is canceled.

Part Ⅱ :Installation and Maintenance

7. Notes for Installation and Maintenance

Safety Precautions: Important!

Please read the safety precautions carefully before installation and maintenance.
The following contents are very important for installation and maintenance.

Please follow the instructions below.

●The installation or maintenance must accord with the instructions.
●Comply with all national electrical codes and local electrical codes.
●Pay attention to the warnings and cautions in this manual.
●All electric work must be performed by a licensed technician according to local regulations and the instructions given in this manual.
●Be caution during installation and maintenance. Prohibit incorrect operation to prevent electric shock, casualty and other accidents.

Warnings

Electrical Safety Precautions:

1. Cut off the power supply of air conditioner before checking and maintenance.
2. The air condition must apply specialized circuit and prohibit share the same circuit with other appliances.
3. The air conditioner should be installed in suitable location and ensure the power plug is touchable.
4. Make sure each wiring terminal is connected firmly during installation and maintenance.
5. Have the unit adequately grounded. The grounding wire can't be used for other purposes.
6. Must apply protective accessories such as cable-cross loop and wire clip.
7. The live wire,neutral wire and grounding wire of power supply must be corresponding to the live wire, neutral wire and grounding wire of the air conditioner.
8. If power cord is broken, please get the specialized power cord from the manufacture or distributor.
9. If the power cord is not long enough, please get the specialized power cord from the manufacture or distributor. Prohibit prolong the wire by yourself.
10. Make sure all wires and pipes are connected properly.
11. Check if there is electric leakage on the unit body. If yes, please eliminate the electric leakage.
12. Replace the fuse with a new one of the same specification if it is burnt down; don't replace it with a cooper wire or conducting wire.
13. If the unit is to be installed in a humid place, the circuit breaker must be installed.

Installation Safety Precautions:

1. Select the installation location according to the requirement of this manual.(See the requirements in installation part)
2. Handle unit transportation with care; the unit should not be carried by only one person if it is more than 20kg.
3. When installing the unit, a suffi-cient fixing bolt must be installed; make sure the installation support is firm.
4. Ware safety belt if the height of working is above 2m.
5. Use equipped components or appointed components dur-ing installation.6. Make sure no foreign objects are left in the unit after fin-ishing installation.

Refrigerant Safety Precautions:

1. Avoid contact between refrigerant and fire as it generates poisonous gas; Prohibit prolong the connection pipe by welding.
2. Apply specified refrigerant only. Never have it mixed with any other refrigerant. Never have air remain in the refrigerant line as it may lead to rupture or other hazards.
3. Make sure no refrigerant gas is leaking out when installation is completed.
4. If there is refrigerant leakage, please take sufficient measure to minimize the density of refrigerant.
5. Never touch the refrigerant piping or compressor without wearing glove to avoid scald or frostbite.

Improper installation may lead to fire hazard, explosion, electric shock or injury.

Main Tools for Installation and Maintenance

1. Screw driver 	**2. Electroprobe** 	**3. Open-end wrench, inner hexagon spanner**  
4. Universal meter 	**5. Vacuum pump** 	**6. Pressure meter** 
7. Electronic leakage detector 	**8. Soldering appliance, refrigerant container**  	

8. Installation

Installation Precaution

Warning

◆ Please follow the local electrical codes and ordinances.
Do not use damaged power cords or cords that do not comply with standards.
◆ Pay attention to safety during installation and maintenance. Please comply with the operation standards, otherwise it may cause electric shock, dropping, injury or even death.

Select a location

Basic requirements:
Installing the unit in the following places may cause malfunctions. If it is unavoidable, please consult local dealer.
1. Places near strong heat sources, vapors, flammable or explosive gas, or places where volatile material spreads in the air.
2. Places with high-frequency devices(e.g. welding machine, medical equipment)
3. Costal area
4. Places with oil or fumes in the air.
5. Places with sulfureted gas.
6. Other places with special circumstances.

Requirements for the Unit:

1. Air inlet and air outlet are away from obstacles.
2. Select a location where the drainage water can be dispersed easily and won't affect other people.
3. The location should be able to withstand the weight of the whole unit and won't increase noise and vibration.
4. Select a location where the noise and outflow air will not affect neighborhood.
5. The location should be able to withstand the weight of the unit.
6. Select a location which is out of children's reach and far away from animals and plants. If it is unavoidable, please add fence for safety purpose.
7. Keep the unit away from fluorescence lamp.

Requirements for Electric Connection

Safety Precaution
1. Must follow the electrical safety regulations during installation.
2. Use qualified power supply circuit and air switch according to local safety regulations.
3. The air switch must have the functions of magnetic tripping and heat tripping in order to prevent short circuit or overload.
4. Make sure the power supply matches with the requirements of air conditioner. Unstable power supply or incorrect wiring may lead to electric shock, fire hazard or malfunctions. Please contact qualified electricians for service before using the air conditioner.
5. Please properly connect the live wire, neutral wire and ground wire of power socket.
6. Be sure to cut off the power supply before proceeding any work related to electrical safety.
7. Do not connect the power before the installation is finished.
8. The air conditioner is I class electrical appliance. It must be properly grounded with specialized grounding device by a professional. Please make sure it is always effectively grounded, otherwise it may cause electric shock.
9. The yellow-green wire or green wire of the air conditioner is grounding wire, which can't be used for other purposes.
10. The grounding resistance should comply with national electrical safety regulations.

Installation Location

The location should be away from electric wire and pipe line. Be sure there's no obstacle inside and outside the wall.

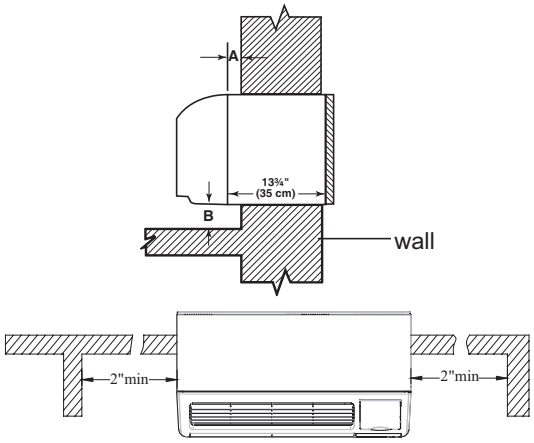

Note: select a location where the power cord can be easily connected to the power socket.

Dimension / Accessories	A (Min distance from wall)	B (Distance from ground)	
		min	max
No accessories	¼" (6.4 mm)	¼" (6.4 mm)	---
With Sub-base	1¾" (4.5 cm)	3½" (8.9cm)	5" (12.7cm)
With ventilation duct	¾" (1.9 cm)	¼" (6.4 mm)	---

Note:
◆ The air conditioner does not come with any accessory. If necessary, please contact local dealer.
◆ If more than one accessory is to be used, use the maximum dimension.
◆ If wall thickness is over 13¾-(A+¼), a sleeve extension must be used. (Contact local dealer if necessary)

Prepare Wall Openings

1. Generally, wall opening should be prepared during construction.(Wall sleeve is modular in fixed dimension. Please prepare the wall opening according to the table below.)
Note: Wall sleeve can't be used to support the unit. Therefore, please do not try to use wall sleeve as a bearer when preparing the wall opening.
2.For existing construction, wall opening must be made. Wall openings of the proper dimensions are essential to avoid the necessity of filers or additional framing.

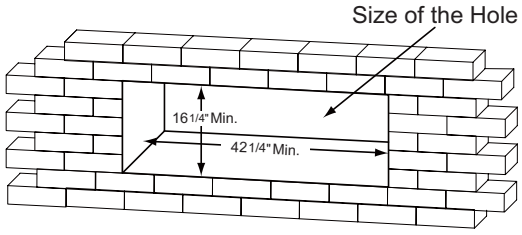

Min dimension of wall opening		Dimension of wall sleeve		
Height	Width	Height	Width	Depth
16 1/4"	42 1/4"	16"	42"	13 3/4"

Install Outdoor Grille

1. Fix the tabs on the outdoor grille and twist screws on the 4 tabs. (If tabs and screws are already prepared on the grille, then skip this step.)
2. Install the outdoor grille on the wall sleeve.
3. Fix the screws from the inside of wall sleeve on the 2 tabs in the middle and then tighten up the other 4 screws.

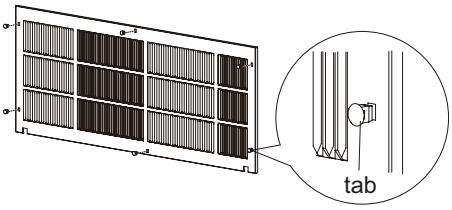

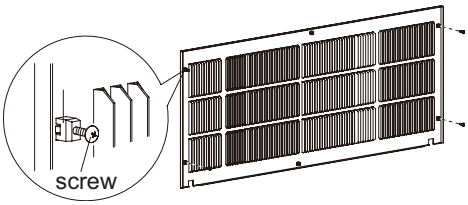

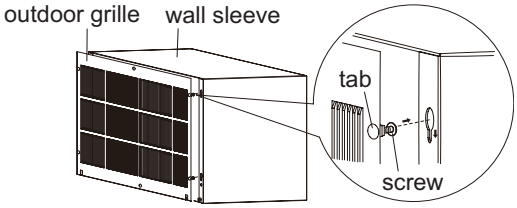

Push the grille screws into the little rings on the edge of wall sleeve, then push the grille downward to fix the screws into the grooves below the rings.

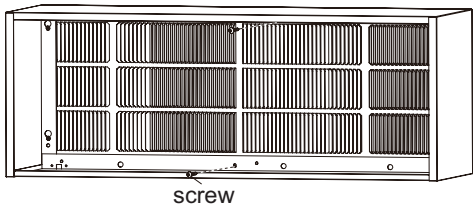

Note:
If the outdoor grille is similar to Fig.1, it's recommended to add an accessory grille(Please contact supplier if needed), which can better prevent air recirculation. Air recirculation may cause performance loss or permanent damage to major components.

◆ Use screws to fix the accessory grille on the outdoor grille and then install the outdoor grille on the wall sleeve.

◆ After the accessory grille is installed, be sure the air outflow directs to the center.

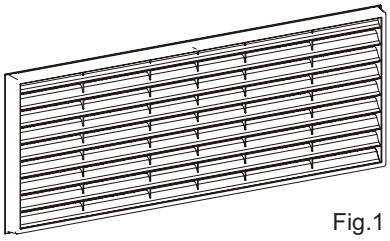

Fig.1

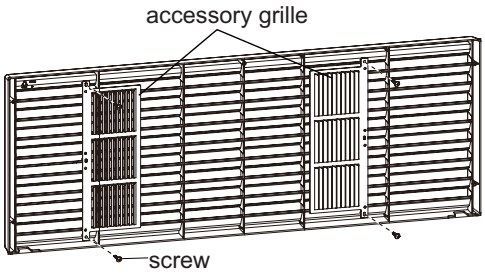

Install Wall Sleeve

Note:

◆ This air conditioner doesn't come with wall sleeve. Please check if your wall sleeve matches with the air conditioner. We suggest you to use Gree wall sleeve. Wall sleeve of General Electric, Amana, Trane or Friedrich is alsp acceptable. Please consult dealer for the details of wall sleeve codes.

◆ Before installation, please examine the wall sleeve carefully. Manufacturer will not take any responsibility for costs or damages caused by defects in sleeve or improper installation.

1. Push the wall sleeve that's installed with outdoor grill into the wall.(Suggestion: the rear edge of the sleeve should extend 1/4"(6.4cm)beyond the outside wall.)
Note: install the sleeve level from side to side or with a slight tile towards outside.
2. Drill holes(diameter: 5/32") on both sides of the wall sleeve and on the related wall. Then use screws to secure the sleeve on the wall opening.
Note: the holes should be at least 2" from the sleeve bottom.
3. Weatherproof gaps between the exterior and interior walls and the case with caulking or equivalent weatherproofing material to prevent air and water infiltration.
Note:

◆ Do not drill any holes on the bottom of wall sleeve.

◆ Do not drill any holes in the wall sleeve for electrical connections.

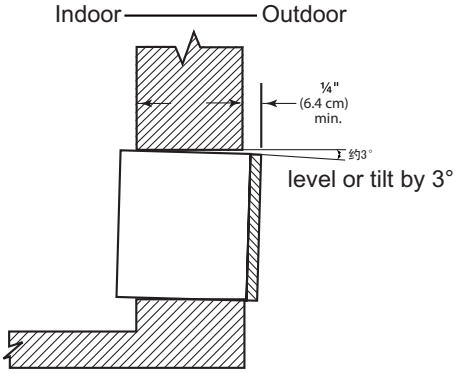

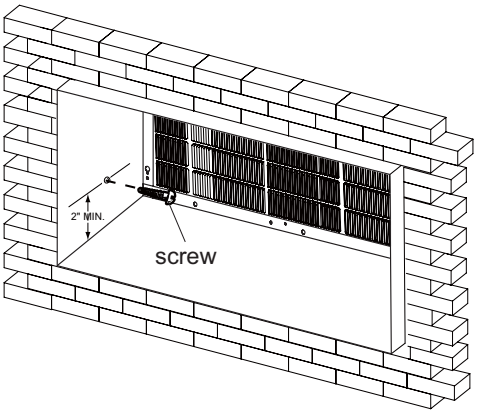

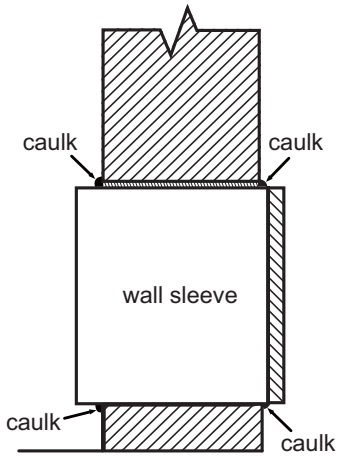

Secure Unit

1. Tear off shipping tape from the front panel and vent door and remove the locking screw on vent door.
Note: please remove the tape and screw, otherwise, vent door can't be used.

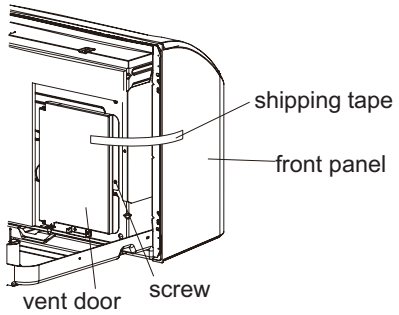

2. Remove front panel——pull out from the bottom and then lift it up.

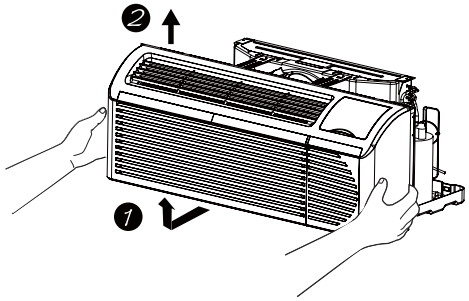

3. Lift unit level and slide it into the pre-installed wall sleeve.
Note: If GE plastic sleeve is used, the bottom foam seal must be removed.

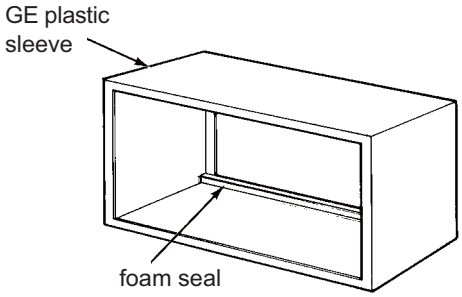

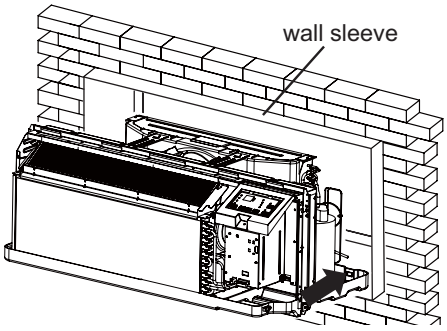

4. Unit's supporter should attach closely to wall sleeve. Secure unit with the supplied screws.

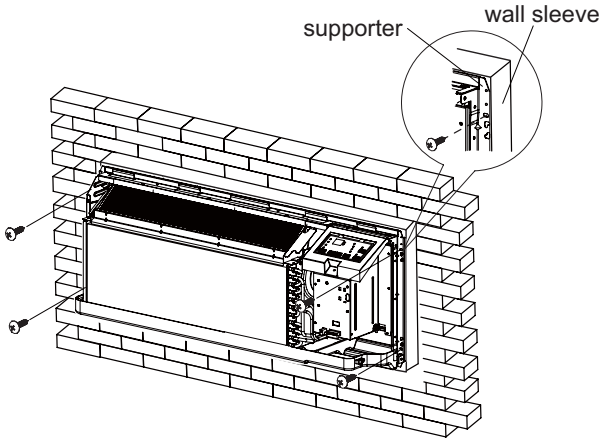

5. Replace front panel——place it from the top on the tab positions and then push inward at bottom until panel snaps into place.

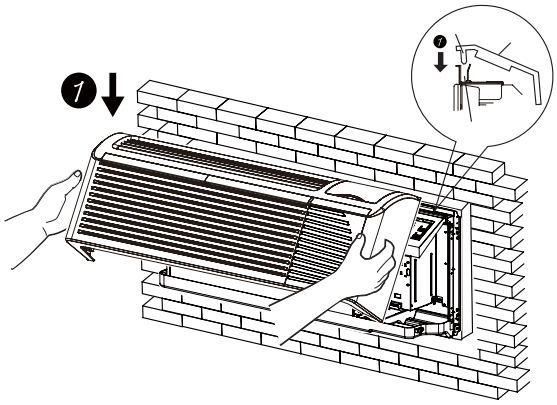

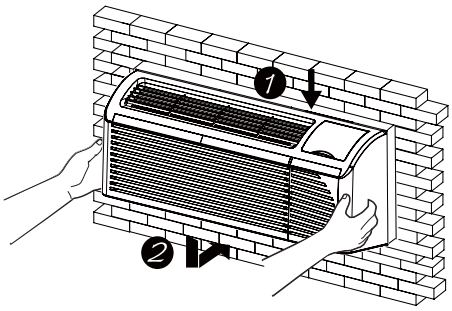

9. Maintenance

9.1 Error Code

NO.	Malfunction Name	Error Code	A/C Status	Possible Causes
1	Indoor ambient temperature sensor is open/short-circuited	F1	The unit will stop operation as it reaches the temperature point.	1.The wiring terminal between indoor ambient temperature sensor and controller is loosened or poorly contacted; 2.There's short circuit due to trip-over of the parts on controller; 3.Indoor ambient temperature sensor is damaged (Please check it by referring to the resistance table for temperature sensor) 4.Main board is broken.
2	Indoor evaporator temperature sensor is open/short-circuited	F2	The unit will stop operation as it reaches the temperature point.	1.The wiring terminal between indoor evaporator temperature sensor and controller is loosened or poorly contacted; 2.There's short circuit due to the trip-over of the parts on controller; 3.Indoor evaporator temperature sensor is damaged (Please check it by referring to the resistance table for temperature sensor) 4.Main board is broken.
3	Outdoor ambient temperature sensor is open/short-circuited	F4	The unit will stop operation as it reaches the temperature point.	1.The wiring terminal between outdoor ambient temperature sensor and controller is loosened or poorly contacted; 2.There's short circuit due to the trip-over of the parts on controller; 3.Outdoor ambient temperature sensor is damaged (Please check it by referring to the resistance table for temperature sensor) 4.Main board is broken.

9.2 Malfunction of Temperature Sensor

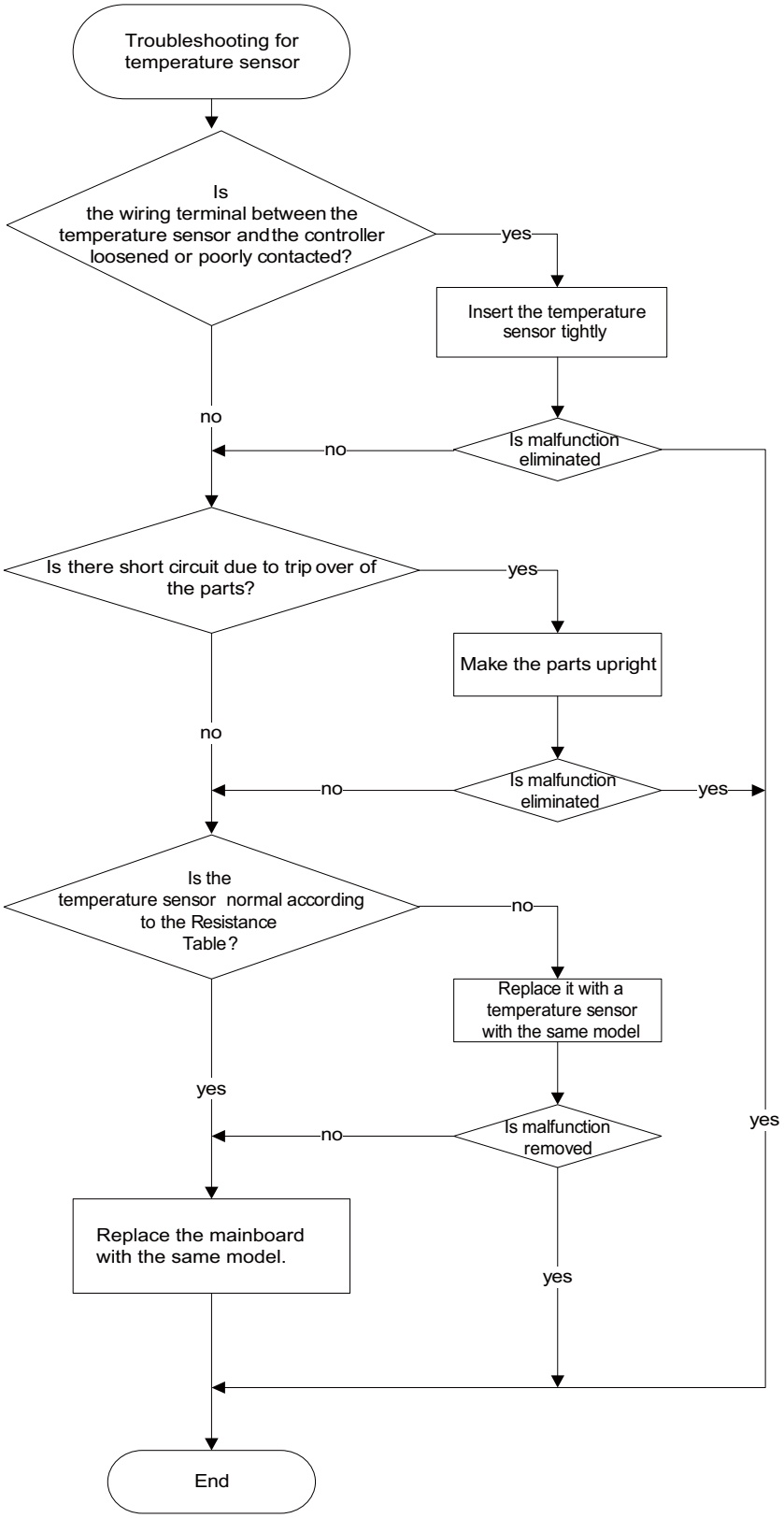

9.3 Maintenance Method for Normal Malfunction

1. Air Conditioner Can't be Started Up

Possible Causes	Discriminating Method (Air conditioner Status)	Troubleshooting
No power supply, or poor connection for power plug	After energization, operation indicator isn't bright and the buzzer can't give out sound	Confirm whether it's due to power failure. If yes, wait for power recovery. If not, check power supply circuit and make sure the power plug is connected well.
Poor connection for wiring terminals	Under normal power supply circumstances, operation indicator isn't bright after energization	Check the circuit according to circuit diagram and connect wires correctly. Make sure all wiring terminals are connected firmly.
Electric leakage for air conditioner	After energization, room circuit breaker trips off at once	1.Make sure the air conditioner is grounded reliably. 2.Make sure wires of air conditioner is connected correctly. 3.Check the wiring inside air conditioner. Check whether the insulation layer of power cord is damaged; if yes, place the power cord.
Model selection for air switch is improper	After energization, air switch trips off	Select proper air switch
Malfunction of remote controller	After energization, operation indicator is bright, while no display on remote controller or buttons have no action.	1.Replace batteries for remote controller. 2.Repair or replace remote controller.

2.Poor Cooling for Air Conditioner

Possible Causes	Discriminating Method (Air conditioner Status)	Troubleshooting
Set temperature is improper	Observe the set temperature on remote controller or Membrane	Adjust the set temperature.
Rotation speed is set too low	Small wind blow	Set the fan speed at high or medium.
Filter is blocked	Check the filter to see it's blocked	Clean the filter.
Installation position for unit is improper	Check whether the installation postion is proper according to installation requirement for air conditioner	Adjust the installation position.
Refrigerant is leaking	Discharged air temperature during cooling is higher than normal discharged wind temperature; Discharged air temperature during heating is lower than normal discharged wind temperature; Unit's pressure is much lower than regulated range	Find out the leakage causes and deal with it. Add refrigerant.
Malfunction of capillary	Discharged air temperature during cooling is higher than normal discharged wind temperature; Discharged air temperature during heating is lower than normal discharged wind temperature; Unit't pressure is much lower than regulated range. If refrigerant isn't leaking, part of capillary is blocked	Replace the capillary.
Malfunction of fan motor	The fan motor can't operate	Refer to point 4 of maintenance method for details.
Malfunction of compressor	Compressor can't operate	Refer to point 5 of maintenance method for details.

3.Poor Heating for Electric Heater

Possible Causes	Discriminating Method (Air conditioner Status)	Troubleshooting
Electric heating relay on main board is damaged	Even heating condition is satisfied, electric heater can't be started up under heating mode	Replace the main board with the same model.
Connection needle stand between main board and display board is loose	Even heating condition is satisfied, electric heater can't be started up under heating mode	Insert the needle stand tightly.
Set temperature and ambient temperature are almost the same	Poor heating effect	Increase the set temperature.

Tube temperature protection	When ambient temperature is high, the detected temperature by indoor tube temperature sensor is high. The detected temperature by temperature sensor at air outlet is also high	Increase the set fan speed. When indoor tube temperature decreases to a certain value, it will resume automatically.
Protection of temperature limiter	Check whether the air inlet is blocked by curtains, clothes, etc.	Clean the filter. Move curtains, clothes and other obstacles.
Malfunction of temperature limiter	When turning on the unit, the heating effect is poor. Use universal meter to measure the two contact points of temperature limiter. If the resistance value is too big, the temperature limiter is damaged	Replace the temperature limiter.
Thermal fuse is burnt out	When turning on the unit, the heating effect is poor. Use universal meter to measure the two contact points of temperature limiter. If the resistance value is too big, the temperature limiter is damaged	Replace the thermal fuse.

4.Fan Motor Can't Operate

Possible Causes	Discriminating Method (Air conditioner Status)	Troubleshooting
Wrong wire connection, or poor connection	Check the wiring status according to circuit diagram	Connect wires according to wiring diagram to make sure all wiring terminals are connected firmly.
Connection needle stand between main board and display board is loose	Check whether the needle stand is loose	Insert the needle stand tightly.
Fan capacitor is damaged	1. Discharge the capacitor at first, and then use universal meter to measure the resistance of fan capacitor. It displays 0 or very small 2. If the resistance is very big, measure the voltage at both ends of capacitor. If the voltage at both ends of capacitor is same with the power input voltage, the fan capacitor is damaged	Replace fan capacitor.
Power voltage is a little low or high	Use universal meter to measure the power supply voltage. The voltage is a little high or low	Suggest to equip with voltage regulator .
Motor of outdoor unit is damaged	When unit is on, cooling/heating performance is bad and ODU compressor generates a lot of noise and heat.	Change compressor oil and refrigerant. If no better, replace the compressor with a new one.

5.Compressor Can't Operate

Possible Causes	Discriminating Method (Air conditioner Status)	Troubleshooting
Wrong wire connection, or poor connection	Check the wiring status according to circuit diagram	Connect wires according to wiring diagram to make sure all wiring terminals are connected firmly.
Compressor relay on main board is damaged or needle stand of compressor is loose	Check whether relay can operate normally under cooling status	Replace the main board with the same model.
Capacitor of compressor is damaged	1. Discharge the capacitor at first, and then use universal meter to measure the resistance of fan capacitor. It displays 0 or very small 2. If the resistance is very big, measure the voltage at both ends of capacitor. If the voltage at both ends of capacitor is same with the power input voltage, the fan capacitor is damaged	Replace the capacitor of compressor.
Power voltage is low or high	After turning on the unit, poor cooling effect or the compressor is turned on or turned off frequently. Use universal meter to measure the power voltage	The fluctuation of the rate voltage is 10%. If the voltage is low or high, please equip with voltage regulator.
Coil of compressor is burnt out	Use universal meter to measure the resistance between compressor terminals and it's 0	Repair or replace compressor.
Cylinder of compressor is blocked	Compressor can't operate	Repair or replace compressor.

6.Air Conditioner is Leaking

Possible Causes	Discriminating Method (Air conditioner Status)	Troubleshooting
Drainage duct is blocked	There’s water leakage at indoors	Eliminate the obstacles inside the drainage duct.
Air conditioner isn’t inclined outwards	There’s water leakage at indoors	The complete unit should incline outwards about 3º.

7.Abnormal Sound and Vibration

Possible Causes	Discriminating Method (Air conditioner Status)	Troubleshooting
When turn on or turn off the unit, the panel and other parts will expand and there's abnormal sound	There's the sound of "PAPA"	Normal phenomenon. Abnormal sound will disappear after a few minutes.
When turn on or turn off the unit, there's abnormal sound due to flow of refrigerant inside air conditioner	Water-running sound can be heard	Normal phenomenon. Abnormal sound will disappear after a few minutes.
Foreign objects inside the unit or there're parts touching together inside the unit	There's abnormal sound fro the unit	Remove foreign objects. Adjust all parts' position of unit, tighten screws and stick damping plaster between connected parts.
Abnormal shake of compressor	Outdoor unit gives out abnormal sound	Adjust the support foot mat of compressor, tighten the bolts.
Abnormal sound inside the compressor	Abnormal sound inside the compressor	If add too much refrigerant during maintenance, please reduce refrigerant properly. Replace compressor for other circumstances.

10. Exploded View and Parts List

GAE07AB-D3RNB2A(CC060001700, CC060001703, CC060001705)
GAE09AB-D3RNB2A(CC060001900, CC060001903, CC060001905)
GAE12AB-D3RNB2A(CC060002100, CC060002103, CC060002105)
GAE15AB-D3RNB2A(CC060021400)
GAE12AB-D3RNB2B(CC060002300, CC060002303, CC060002305)
GAE15AB-D3RNB2B(CC060002500, CC060002503, CC060002505)
GAE07AB-D3RNB3A(CC060024000)

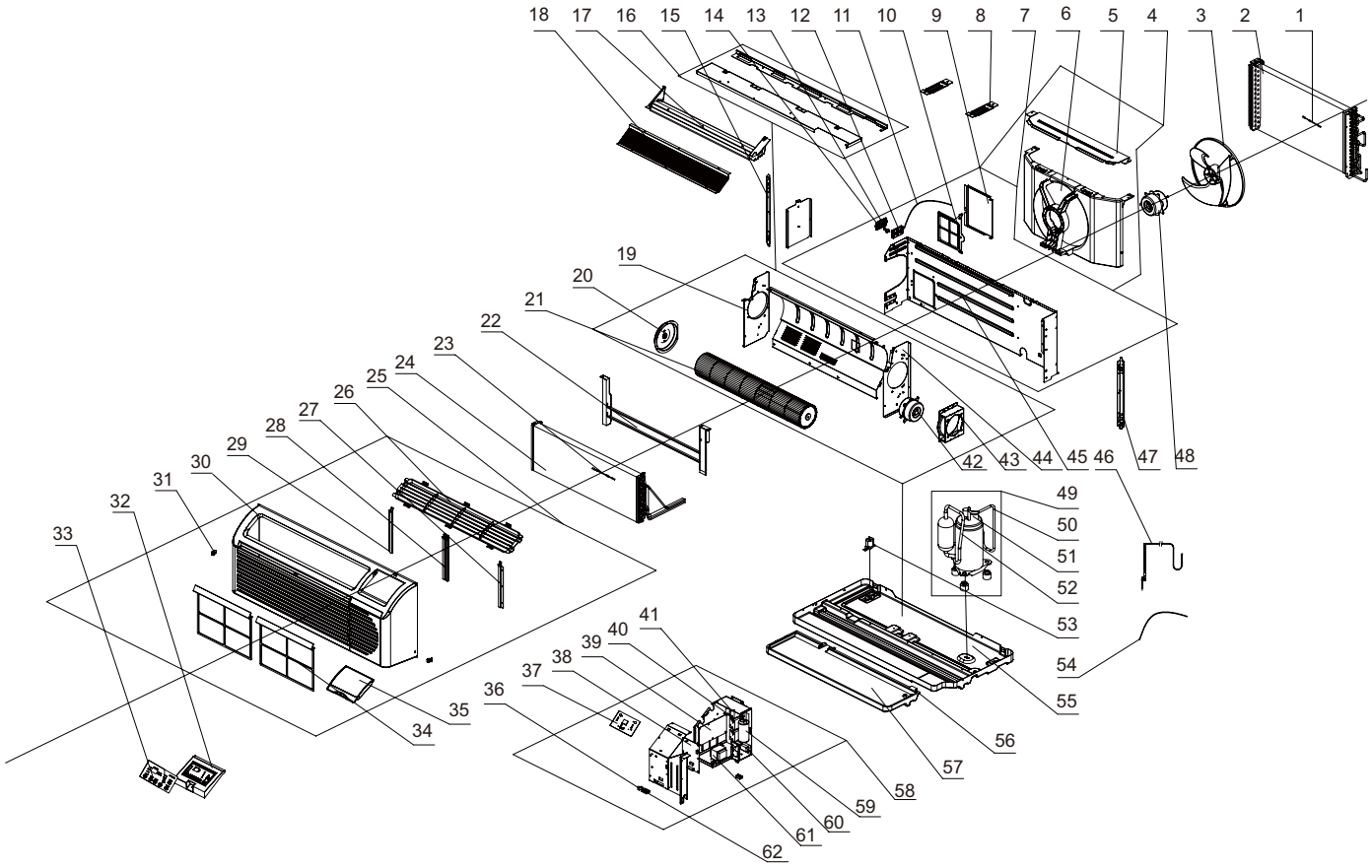

NO.	Description	Part Code		Qty
		GAE07AB-D3RNB2A	GAE09AB-D3RNB2A	
	Product Code	CC060001700	CC060001900	
1	Ambient Temperature Sensor	3900012123	3900012123	1
2	Condenser Assy	01101289	01101348	1
3	Axial Flow Fan	10331004	10331004	1
4	Flow Guide Loop	10371215	10371215	1
5	Diversion Circle Cover	01251028P	01251028P	1
6	Diversion Circle	10371213	10371213	1
7	Mid Clapboard Assy	01231154	01231154	1
8	Mid-connect board	01381004	01381004	2
9	Air Inlet Door Sub-assy	01441015	01441015	1
10	Filter Sub-Assy	11121213	11121213	1
11	Door thread	02121014	02121014	1
12	Lower cover of hand lever	26231155	26231155	1
13	Hand lever	26231153	26231153	1
14	Upper cover of hand lever	26231154	26231154	1
15	Outer support sub-assy (left)	01701015	01701015	1
16	Top Cover Plate Sub-Assy	01251013	01251013	1
17	Helicoid Tongue sub-assy	02121028P	02121028P	1
18	Rear grill	01471017	01471017	1
19	Left side board of duct	02121024P	02121024P	1
20	Bearing Holder sub-assy	26151139	26151139	1
21	Cross Flow Fan	10351002	10351002	1
22	Electric Heater	3200000201	3200000201	1
23	Tube Sensor	390001921	390001921	1
24	Evaporator Assy	0100106601	0100106001	1
25	Front Panel Assy	20001475	20001475	1
26	Air Outlet Grille	22411153	22411153	1
27	Press board of filter 1	26111139	26111139	1
28	Press board of filter 2	26111140	26111140	1
29	Press board of filter 3	26111141	26111141	1
30	Front Panel	20001457	20001457	1
31	Front panel clip	02111013	02111013	2
32	LCD Cover	20121097	20121097	1
33	Membrane	63061309	63061309	1
34	Filter	11121212	11121212	2
35	Remote Control Cover	20121070	20121070	1
36	Wiring terminal	42010037	42010037	1
37	Display Board	30562029	30562029	1
38	Main board 1	30132040	30132040	1
39	Main board 2	30132043	30132043	1
40	Capacitor CBB61	33010089	33010035	1
41	Capacitor CBB61	33010025	33000017	1
42	Fan Motor	1501180202	15011802	1
43	Motor Support Sub-Assy	01701014P	01701014P	1
44	Right side board of duct	02121023P	02121023P	1
45	Mid-Clapboard	01231079P	01231079P	1
46	Capillary Sub-assy	03001764	03001766	1

47	Outer support sub-assy (right)	01701016	01701016	1
48	Fan Motor	150110343	150110343	1
49	Compressor and fittings	00101061	00101049	1
50	Discharge Tube 1	03611753	03611753	1
51	Overload Protector	00180303	/	1
52	Inhalation Tube 1	03621923	03621829	1
53	Drainage Valve	07100164	07100164	1
54	Power Cord	400203632	400203632	1
55	Chassis Sub-assy	0120102601P	0120102603P	1
56	Foam (water tray)	12411904	12411904	1
57	Thermal baffle	02121012	02121012	1
58	Electric Box Assy	2010129801	2010129803	1
59	Capacitor CBB65	33010045	33010045	1
60	Terminal Board	42011103	42011103	1
61	Transformer	43110270	43110270	1
62	Wiring terminal	42010039S	42010039S	1

Above data is subject to change without notice.

NO.	Description	Part Code		Qty
		GAE12AB-D3RNB2A	GAE12AB-D3RNB2B	
	Product Code	CC060002100	CC060002300	
1	Ambient Temperature Sensor	3900012123	3900012123	1
2	Condenser Assy	01101348	01101348	1
3	Axial Flow Fan	10331004	10331004	1
4	Flow Guide Loop	10371215	10371215	1
5	Diversion Circle Cover	01251028P	01251028P	1
6	Diversion Circle	10371213	10371213	1
7	Mid Clapboard Assy	01231154	01231154	1
8	Mid-connect board	01381004	01381004	2
9	Air Inlet Door Sub-assy	01441015	01441015	1
10	Filter Sub-Assy	11121213	11121213	1
11	Door thread	02121014	02121014	1
12	Lower cover of hand lever	26231155	26231155	1
13	Hand lever	26231153	26231153	1
14	Upper cover of hand lever	26231154	26231154	1
15	Outer support sub-assy (left)	01701015	01701015	1
16	Top Cover Plate Sub-Assy	01251013	01251013	1
17	Helicoid Tongue sub-assy	02121028P	02121028P	1
18	Rear grill	01471017	01471017	1
19	Left side board of duct	02121024P	02121024P	1
20	Bearing Holder sub-assy	26151139	26151139	1
21	Cross Flow Fan	10351002	10351002	1
22	Electric Heater	3200000201	3200000201	1
23	Tube Sensor	390001921	390001921	1
24	Evaporator Assy	0100128501	0100128501	1
25	Front Panel Assy	20001475	20001475	1
26	Air Outlet Grille	22411153	22411153	1
27	Press board of filter 1	26111139	26111139	1
28	Press board of filter 2	26111140	26111140	1
29	Press board of filter 3	26111141	26111141	1
30	Front Panel	20001457	20001457	1
31	Front panel clip	02111013	02111013	2
32	LCD Cover	20121097	20121097	1
33	Membrane	63061309	63061309	1
34	Filter	11121212	11121212	2
35	Remote Control Cover	20121070	20121070	1
36	Wiring terminal	42010037	42010037	1
37	Display Board	30562029	30562029	1
38	Main board 1	30132040	30132040	1
39	Main board 2	30132043	30132072	1
40	Capacitor CBB61	33010089	33010089	1
41	Capacitor CBB61	33010026	33010026	1
42	Fan Motor	1501180203	1501180203	1
43	Motor Support Sub-Assy	01701014P	01701014P	1
44	Right side board of duct	02121023P	02121023P	1
45	Mid-Clapboard	01231079P	01231079P	1
46	Capillary Sub-assy	03001139	03001139	1

47	Outer support sub-assy (right)	01701016	01701016	1
48	Fan Motor	15011047	15011047	1
49	Compressor and fittings	00101087	00101087	1
50	Discharge Tube 1	03611611	03611611	1
51	Overload Protector	00181071	00181071	1
52	Inhalation Tube 1	03621634	03621634	1
53	Drainage Valve	07100164	07100164	1
54	Power Cord	400203632	4002056001	1
55	Chassis Sub-assy	0120102607P	0120102607P	1
56	Foam (water tray)	12411904	12411904	1
57	Thermal baffle	02121012	02121012	1
58	Electric Box Assy	2010129805	2010129807	1
59	Capacitor CBB65	33000017	33000017	1
60	Terminal Board	42011103	42011103	1
61	Transformer	43110270	43110270	1
62	Wiring terminal	42010039S	42010039S	1

Above data is subject to change without notice.

NO.	Description	Part Code		Qty
		GAE15AB-D3RNB2B		
	Product Code	CC060002500	CC060002505	
1	Ambient Temperature Sensor	3900012123	3900012123	1
2	Condenser Assy	01101191	0110119103	1
3	Axial Flow Fan	10331004	10331004	1
4	Flow Guide Loop	10371215	10371215	1
5	Diversion Circle Cover	01251028P	01251028P	1
6	Diversion Circle	10371213	10371213	1
7	Mid Clapboard Assy	01231154	0123115401	1
8	Mid-connect board	01381004	01381004P	2
9	Air Inlet Door Sub-assy	01441015	01441015	1
10	Filter Sub-Assy	11121213	11121213	1
11	Door thread	02121014	02121014	1
12	Lower cover of hand lever	26231155	26231155	1
13	Hand lever	26231153	26231153	1
14	Upper cover of hand lever	26231154	26231154	1
15	Outer support sub-assy (left)	01701015	01701015	1
16	Top Cover Plate Sub-Assy	01251013	01251013P	1
17	Helicoid Tongue sub-assy	02121028P	02121028P	1
18	Rear grill	01471017	01471017	1
19	Left side board of duct	02121024P	02121024P	1
20	Bearing Holder sub-assy	26151139	26151139	1
21	Cross Flow Fan	10351002	10351002	1
22	Electric Heater	32000002	32000002	1
23	Tube Sensor	390001921	390001921	1
24	Evaporator Assy	0100128501	0100128501	1
25	Front Panel Assy	20001475	2000147502	1
26	Air Outlet Grille	22411153	2241102301	1
27	Press board of filter 1	26111139	2611113901	1
28	Press board of filter 2	26111140	2611114001	1
29	Press board of filter 3	26111141	2611114101	1
30	Front Panel	20001457	2000145702	1
31	Front panel clip	02111013	02111013	2
32	LCD Cover	20121097	20121097	1
33	Membrane	63061309	63061309	1
34	Filter	11121212	1112121201	2
35	Remote Control Cover	20121070	2012107001	1
36	Wiring terminal	42010037	42010037	1
37	Display Board	30562029	30562029	1
38	Main board 1	30132040	30132040	1
39	Main board 2	30132072	30132072	1
40	Capacitor CBB61	33010026	33010026	1
41	Capacitor CBB61	33010089	33010089	1
42	Fan Motor	1501180203	1501180203	1
43	Motor Support Sub-Assy	01701014P	01701014P	1
44	Right side board of duct	02121023P	02121023P	1
45	Mid-Clapboard	01231079P	01231079P	1
46	Capillary Sub-assy	03001341	03001341	1

47	Outer support sub-assy (right)	01701016	01701016	1
48	Fan Motor	15011047	15011047	1
49	Compressor and fittings	00101085	00101085	1
50	Discharge Tube 1	03611432	03611432	1
51	Overload Protector	00180326	00180326	1
52	Inhalation Tube 1	03621354	03621354	1
53	Drainage Valve	07100164	07100164	1
54	Power Cord	4002056001	4002056001	1
55	Chassis Sub-assy	01201026P	01201026P	1
56	Foam (water tray)	12411904	12411904	1
57	Thermal baffle	02121012	02121012	1
58	Electric Box Assy	2010129809	2010129809	1
59	Capacitor CBB65	33010045	33010045	1
60	Terminal Board	42011103	42011103	1
61	Transformer	43110270	43110270	1
62	Wiring terminal	42010039S	42010039S	1

Above data is subject to change without notice.

NO.	Description	Part Code		Qty
		GAE07AB-D3RNB2A	GAE09AB-D3RNB2A	
	Product Code	CC060001705	CC060001905	
1	Ambient Temperature Sensor	3900012123	3900012123	1
2	Condenser Assy	01101105	01101099	1
3	Axial Flow Fan	10331004	10331004	1
4	Flow Guide Loop	10371215	10371215	1
5	Diversion Circle Cover	01251028P	01251028P	1
6	Diversion Circle	10371213	10371213	1
7	Mid Clapboard Assy	0123115401	0123115401	1
8	Mid-connect board	01381004P	01381004P	2
9	Air Inlet Door Sub-assy	01441015	01441015	1
10	Filter Sub-Assy	11121213	11121213	1
11	Door thread	02121014	02121014	1
12	Lower cover of hand lever	26231155	26231155	1
13	Hand lever	26231153	26231153	1
14	Upper cover of hand lever	26231154	26231154	1
15	Outer support sub-assy (left)	01701018	01701018	1
16	Top Cover Plate Sub-Assy	01251013P	01251013P	1
17	Helicoid Tongue sub-assy	02121028P	02121028P	1
18	Rear grill	01471017	01471017	1
19	Left side board of duct	02121024P	02121024P	1
20	Bearing Holder sub-assy	26151139	26151139	1
21	Cross Flow Fan	10351002	10351002	1
22	Electric Heater	3200000201	3200000201	1
23	Tube Sensor	390001921	390002073	1
24	Evaporator Assy	0100106601	0100106001	1
25	Front Panel Assy	2000147502	2000147502	1
26	Air Outlet Grille	2241102301	2241102301	1
27	Press board of filter 1	2611113901	2611113901	1
28	Press board of filter 2	2611114001	2611114001	1
29	Press board of filter 3	2611114101	2611114101	1
30	Front Panel	2000145702	2000145702	1
31	Front panel clip	02111013	02111013	2
32	LCD Cover	2012109701	2012109701	1
33	Membrane	63061309	63061309	1
34	Filter	1112121201	1112121201	2
35	Remote Control Cover	2012107001	2012107001	1
36	Wiring terminal	42010037	42010039S	1
37	Display Board	30562029	30562029	1
38	Main board 1	30132040	30132040	1
39	Main board 2	33010025	33010089	1
40	Capacitor CBB61	1501180202	15011802	1
41	Capacitor CBB61	01701014P	01701014P	1
42	Fan Motor	02121023P	02121023P	1
43	Motor Support Sub-Assy	01231079P	01231079P	1
44	Right side board of duct	03001764	03001766	1
45	Mid-Clapboard	01701019	01701019	1
46	Capillary Sub-assy	150110343	150110343	1

47	Outer support sub-assy (right)	00101061	00101049	1
48	Fan Motor	03611753	03611515	1
49	Compressor and fittings	00180303	/	1
50	Discharge Tube 1	03621923	03621829	1
51	Overload Protector	07100164	07100164	1
52	Inhalation Tube 1	400203632	400203632	1
53	Drainage Valve	0120102601P	0120102603P	1
54	Power Cord	12411904	12411904	1
55	Chassis Sub-assy	02121012	02121012	1
56	Foam (water tray)	2010129801	2010129803	1
57	Thermal baffle	33010045	33000017	1
58	Electric Box Assy	42011103	42011103	1
59	Capacitor CBB65	43110270	43110270	1
60	Terminal Board	42010039S	42010039S	1
61	Transformer	43110270	43110270	1
62	Wiring terminal	42010039S	42010039S	1

Above data is subject to change without notice.

NO.	Description	Part Code		Qty
		GAE12AB-D3RNB2A	GAE12AB-D3RNB2B	
	Product Code	CC060002105	CC060002305	
1	Ambient Temperature Sensor	3900012123	3900012123	1
2	Condenser Assy	01101099	01101099	1
3	Axial Flow Fan	10331004	10331004	1
4	Flow Guide Loop	10371215	10371215	1
5	Diversion Circle Cover	01251028P	01251028P	1
6	Diversion Circle	10371213	10371213	1
7	Mid Clapboard Assy	0123115401	0123115401	1
8	Mid-connect board	01381004	01381004P	2
9	Air Inlet Door Sub-assy	01441015	01441015	1
10	Filter Sub-Assy	11121213	11121213	1
11	Door thread	02121014	02121014	1
12	Lower cover of hand lever	26231155	26231155	1
13	Hand lever	26231153	26231153	1
14	Upper cover of hand lever	26231154	26231154	1
15	Outer support sub-assy (left)	01701018	01701015	1
16	Top Cover Plate Sub-Assy	01251013P	01251013P	1
17	Helicoid Tongue sub-assy	02121028P	02121028P	1
18	Rear grill	01471017	01471017	1
19	Left side board of duct	02121024P	02121024P	1
20	Bearing Holder sub-assy	26151139	26151139	1
21	Cross Flow Fan	10351002	10351002	1
22	Electric Heater	3200000201	3200000201	1
23	Tube Sensor	390000596	390001921	1
24	Evaporator Assy	0100128501	0100128501	1
25	Front Panel Assy	2000147502	2000147502	1
26	Air Outlet Grille	2241102301	2241102301	1
27	Press board of filter 1	2611113901	2611113901	1
28	Press board of filter 2	2611114001	2611114001	1
29	Press board of filter 3	2611114101	2611114101	1
30	Front Panel	2000145702	2000145702	1
31	Front panel clip	02111013	02111013	2
32	LCD Cover	2012109701	20121097	1
33	Membrane	63061309	63061309	1
34	Filter	1112121201	1112121201	2
35	Remote Control Cover	2012107001	2012107001	1
36	Wiring terminal	42010037	42010037	1
37	Display Board	30562029	30562029	1
38	Main board 1	30132040	30132040	1
39	Main board 2	33010026	33010026	1
40	Capacitor CBB61	1501180203	1501180203	1
41	Capacitor CBB61	01701014P	01701014P	1
42	Fan Motor	02121023P	02121023P	1
43	Motor Support Sub-Assy	01231079P	01231079P	1
44	Right side board of duct	03001139	03001139	1
45	Mid-Clapboard	01701019	01701016	1
46	Capillary Sub-assy	15011047	15011047	1

47	Outer support sub-assy (right)	00101087	00101087	1
48	Fan Motor	03611611	03611611	1
49	Compressor and fittings	00181071	00181071	1
50	Discharge Tube 1	03621634	03621634	1
51	Overload Protector	07100164	07100164	1
52	Inhalation Tube 1	400203632	4002056001	1
53	Drainage Valve	0120102607P	0120102607P	1
54	Power Cord	12411904	12411904	1
55	Chassis Sub-assy	02121012	02121012	1
56	Foam (water tray)	2010129805	2010129807	1
57	Thermal baffle	33000017	33000017	1
58	Electric Box Assy	42011103	42011103	1
59	Capacitor CBB65	43110270	43110270	1
60	Terminal Board	42010039S	42010039S	1
61	Transformer	43110270	43110270	1
62	Wiring terminal	42010039S	42010039S	1

Above data is subject to change without notice.

NO.	Description	Part Code		Qty
		GAE07AB-D3RNB2A	GAE09AB-D3RNB2A	
	Product Code	CC060001703	CC060001903	
1	Ambient Temperature Sensor	3900012123	3900012123	1
2	Condenser Assy	01101289	01101348	1
3	Axial Flow Fan	10331004	10331004	1
4	Flow Guide Loop	10371215	10371215	1
5	Diversion Circle Cover	01251028P	01251028P	1
6	Diversion Circle	10371213	10371213	1
7	Mid Clapboard Assy	01231154	01231154	1
8	Mid-connect board	01381004	01381004	2
9	Air Inlet Door Sub-assy	01441015	01441015	1
10	Filter Sub-Assy	11121213	11121213	1
11	Door thread	02121014	02121014	1
12	Lower cover of hand lever	26231155	26231155	1
13	Hand lever	26231153	26231153	1
14	Upper cover of hand lever	26231154	26231154	1
15	Outer support sub-assy (left)	01701015	01701015	1
16	Top Cover Plate Sub-Assy	01251013	01251013	1
17	Helicoid Tongue sub-assy	02121028P	02121028P	1
18	Rear grill	01471017	01471017	1
19	Left side board of duct	02121024P	02121024P	1
20	Bearing Holder sub-assy	26151139	26151139	1
21	Cross Flow Fan	10351002	10351002	1
22	Electric Heater	3200000201	3200000201	1
23	Tube Sensor	390001921	390001921	1
24	Evaporator Assy	0100106601	0100106001	1
25	Front Panel Assy	2000147502	2000147502	1
26	Air Outlet Grille	2241102301	2241102301	1
27	Press board of filter 1	2611113901	2611113901	1
28	Press board of filter 2	2611114001	2611114001	1
29	Press board of filter 3	2611114101	2611114101	1
30	Front Panel	2000145702	2000145702	1
31	Front panel clip	02111013	02111013	2
32	LCD Cover	2012109701	2012109701	1
33	Membrane	63061309	63061309	1
34	Filter	1112121201	1112121201	2
35	Remote Control Cover	2012107001	2012107001	1
36	Wiring terminal	42010037	42010037	1
37	Display Board	30562029	30562029	1
38	Main board 1	30132040	30132040	1
39	Main board 2	30132043	30132043	1
40	Capacitor CBB61	33010089	33010035	1
41	Capacitor CBB61	33010025	33000017	1
42	Fan Motor	1501180202	15011802	1
43	Motor Support Sub-Assy	01701014P	01701014P	1
44	Right side board of duct	02121023P	02121023P	1
45	Mid-Clapboard	01231079P	01231079P	1
46	Capillary Sub-assy	03001764	03001766	1

47	Outer support sub-assy (right)	01701016	01701016	1
48	Fan Motor	150110343	150110343	1
49	Compressor and fittings	00101061	00101049	1
50	Discharge Tube 1	03611753	03611753	1
51	Overload Protector	00180303	/	1
52	Inhalation Tube 1	03621923	03621829	1
53	Drainage Valve	07100164	07100164	1
54	Power Cord	400203632	400203632	1
55	Chassis Sub-assy	0120102601P	0120102603P	1
56	Foam (water tray)	12411904	12411904	1
57	Thermal baffle	02121012	02121012	1
58	Electric Box Assy	2010129801	2010129803	1
59	Capacitor CBB65	33010045	33010045	1
60	Terminal Board	42011103	42011103	1
61	Transformer	43110270	43110270	1
62	Wiring terminal	42010039S	42010039S	1

Above data is subject to change without notice.

NO.	Description	Part Code		Qty
		GAE12AB-D3RNB2A	GAE12AB-D3RNB2B	
	Product Code	CC060002103	CC060002303	
1	Ambient Temperature Sensor	3900012123	3900012123	1
2	Condenser Assy	01101348	01101348	1
3	Axial Flow Fan	10331004	10331004	1
4	Flow Guide Loop	10371215	10371215	1
5	Diversion Circle Cover	01251028P	01251028P	1
6	Diversion Circle	10371213	10371213	1
7	Mid Clapboard Assy	01231154	01231154	1
8	Mid-connect board	01381004	01381004	2
9	Air Inlet Door Sub-assy	01441015	01441015	1
10	Filter Sub-Assy	11121213	11121213	1
11	Door thread	02121014	02121014	1
12	Lower cover of hand lever	26231155	26231155	1
13	Hand lever	26231153	26231153	1
14	Upper cover of hand lever	26231154	26231154	1
15	Outer support sub-assy (left)	01701015	01701015	1
16	Top Cover Plate Sub-Assy	01251013	01251013	1
17	Helicoid Tongue sub-assy	02121028P	02121028P	1
18	Rear grill	01471017	01471017	1
19	Left side board of duct	02121024P	02121024P	1
20	Bearing Holder sub-assy	26151139	26151139	1
21	Cross Flow Fan	10351002	10351002	1
22	Electric Heater	3200000201	3200000201	1
23	Tube Sensor	390001921	390001921	1
24	Evaporator Assy	0100128501	0100128501	1
25	Front Panel Assy	2000147502	2000147502	1
26	Air Outlet Grille	2241102301	2241102301	1
27	Press board of filter 1	2611113901	2611113901	1
28	Press board of filter 2	2611114001	2611114001	1
29	Press board of filter 3	2611114101	2611114101	1
30	Front Panel	2000145702	2000145702	1
31	Front panel clip	02111013	02111013	2
32	LCD Cover	2012109701	2012109701	1
33	Membrane	63061309	63061309	1
34	Filter	1112121201	1112121201	2
35	Remote Control Cover	2012107001	2012107001	1
36	Wiring terminal	42010037	42010037	1
37	Display Board	30562029	30562029	1
38	Main board 1	30132040	30132040	1
39	Main board 2	30132043	30132072	1
40	Capacitor CBB61	33010089	33010089	1
41	Capacitor CBB61	33010026	33010026	1
42	Fan Motor	1501180203	1501180203	1
43	Motor Support Sub-Assy	01701014P	01701014P	1
44	Right side board of duct	02121023P	02121023P	1
45	Mid-Clapboard	01231079P	01231079P	1
46	Capillary Sub-assy	03001139	03001139	1

47	Outer support sub-assy (right)	01701016	01701016	1
48	Fan Motor	15011047	15011047	1
49	Compressor and fittings	00101087	00101087	1
50	Discharge Tube 1	03611611	03611611	1
51	Overload Protector	00181071	00181071	1
52	Inhalation Tube 1	03621634	03621634	1
53	Drainage Valve	07100164	07100164	1
54	Power Cord	400203632	4002056001	1
55	Chassis Sub-assy	0120102607P	0120102607P	1
56	Foam (water tray)	12411904	12411904	1
57	Thermal baffle	02121012	02121012	1
58	Electric Box Assy	2010129805	2010129807	1
59	Capacitor CBB65	33000017	33000017	1
60	Terminal Board	42011103	42011103	1
61	Transformer	43110270	43110270	1
62	Wiring terminal	42010039S	42010039S	1

Above data is subject to change without notice.

NO.	Description	Part Code		Qty
		GAE15AB-D3RNB2A	GAE15AB-D3RNB2B	
	Product Code	CC060021400	CC060002503	
1	Ambient Temperature Sensor	3900012123	3900012123	1
2	Condenser Assy	01101191	01101191	1
3	Axial Flow Fan	10331004	10331004	1
4	Flow Guide Loop	10371215	10371215	1
5	Diversion Circle Cover	01251028P	01251028P	1
6	Diversion Circle	10371213	10371213	1
7	Mid Clapboard Assy	01231154	01231154	1
8	Mid-connect board	01381004	01381004	2
9	Air Inlet Door Sub-assy	01441015	01441015	1
10	Filter Sub-Assy	11121213	11121213	1
11	Door thread	02121014	02121014	1
12	Lower cover of hand lever	26231155	26231155	1
13	Hand lever	26231153	26231153	1
14	Upper cover of hand lever	26231154	26231154	1
15	Outer support sub-assy (left)	01701015	01701015	1
16	Top Cover Plate Sub-Assy	01251013	01251013	1
17	Helicoid Tongue sub-assy	02121028P	02121028P	1
18	Rear grill	01471017	01471017	1
19	Left side board of duct	02121024P	02121024P	1
20	Bearing Holder sub-assy	26151139	26151139	1
21	Cross Flow Fan	10351002	10351002	1
22	Electric Heater	3200000201	32000002	1
23	Tube Sensor	390001921	390001921	1
24	Evaporator Assy	0100128501	0100128501	1
25	Front Panel Assy	20001475	2000147502	1
26	Air Outlet Grille	2241102301	2241102301	1
27	Press board of filter 1	2611113901	2611113901	1
28	Press board of filter 2	2611114001	2611114001	1
29	Press board of filter 3	2611114101	2611114101	1
30	Front Panel	20001457	2000145702	1
31	Front panel clip	02111013	02111013	2
32	LCD Cover	2012109701	2012109701	1
33	Membrane	63061309	63061309	1
34	Filter	1112121201	1112121201	2
35	Remote Control Cover	2012107001	2012107001	1
36	Wiring terminal	42010037	42010037	1
37	Display Board	30562029	30562029	1
38	Main board 1	30132040	30132040	1
39	Main board 2	30132072	30132072	1
40	Capacitor CBB61	33010026	33010026	1
41	Capacitor CBB61	33010089	33010089	1
42	Fan Motor	1501180203	1501180203	1
43	Motor Support Sub-Assy	01701014P	01701014P	1
44	Right side board of duct	02121023P	02121023P	1
45	Mid-Clapboard	01231079P	01231079P	1
46	Capillary Sub-assy	03001341	03001341	1

47	Outer support sub-assy (right)	01701016	01701016	1
48	Fan Motor	15011047	15011047	1
49	Compressor and fittings	00101085	00101085	1
50	Discharge Tube 1	03611432	03611432	1
51	Overload Protector	00180326	00180326	1
52	Inhalation Tube 1	03621354	03621354	1
53	Drainage Valve	07100164	07100164	1
54	Power Cord	4002056001	4002056001	1
55	Chassis Sub-assy	01201026P	01201026P	1
56	Foam (water tray)	12411904	12411904	1
57	Thermal baffle	02121012	02121012	1
58	Electric Box Assy	2010129809	2010129809	1
59	Capacitor CBB65	33010045	33010045	1
60	Terminal Board	42011103	42011103	1
61	Transformer	43110270	43110270	1
62	Wiring terminal	42010039S	42010039S	1

Above data is subject to change without notice.

NO.	Description	Part Code	Qty
		GAE15AB-D3RNB2A	
	Product Code	CC060021401	
1	Ambient Temperature Sensor	3900012123	1
2	Condenser Assy	0110119102	1
3	Axial Flow Fan	10331004	1
4	Flow Guide Loop	10371215	1
5	Diversion Circle Cover	01251028P	1
6	Diversion Circle	10371213	1
7	Mid Clapboard Assy	01231154	1
8	Mid-connect board	01381004P	2
9	Air Inlet Door Sub-assy	01441015	1
10	Filter Sub-Assy	11121213	1
11	Door thread	02121014	1
12	Lower cover of hand lever	26231155	1
13	Hand lever	26231153	1
14	Upper cover of hand lever	26231154	1
15	Outer support sub-assy (left)	01701015	1
16	Top Cover Plate Sub-Assy	01251013P	1
17	Helicoid Tongue sub-assy	02121028P	1
18	Rear grill	01471017	1
19	Left side board of duct	02121024P	1
20	Bearing Holder sub-assy	26151139	1
21	Cross Flow Fan	10351002	1
22	Electric Heater	3200000201	1
23	Tube Sensor	390001921	1
24	Evaporator Assy	0100128501	1
25	Front Panel Assy	20001475	1
26	Air Outlet Grille	2241102301	1
27	Press board of filter 1	2611113901	1
28	Press board of filter 2	2611114001	1
29	Press board of filter 3	2611114101	1
30	Front Panel	20001457	1
31	Front panel clip	02111013	2
32	LCD Cover	2012109701	1
33	Membrane	63061309	1
34	Filter	1112121201	2
35	Remote Control Cover	2012107001	1
36	Wiring terminal	42010037	1
37	Display Board	30562029	1
38	Main board 1	30132040	1
39	Main board 2	30132072	1
40	Capacitor CBB61	33010026	1
41	Capacitor CBB61	33010089	1
42	Fan Motor	1501180203	1
43	Motor Support Sub-Assy	01701014P	1
44	Right side board of duct	02121023P	1
45	Mid-Clapboard	01231079P	1
46	Capillary Sub-assy	03001341	1

47	Outer support sub-assy (right)	01701016	1
48	Fan Motor	15011047	1
49	Compressor and fittings	00101085	1
50	Discharge Tube 1	03611432	1
51	Overload Protector	00180326	1
52	Inhalation Tube 1	03621354	1
53	Drainage Valve	07100164	1
54	Power Cord	4002056001	1
55	Chassis Sub-assy	01201026P	1
56	Foam (water tray)	12411904	1
57	Thermal baffle	02121012	1
58	Electric Box Assy	2010129809	1
59	Capacitor CBB65	33010045	1
60	Terminal Board	42011103	1
61	Transformer	43110270	1
62	Wiring terminal	42010039S	1

Above data is subject to change without notice.

NO.	Description	Part Code	Qty
		GAE07AB-D3RNB3A	
	Product Code	CC060024000	
1	Ambient Temperature Sensor	3900012123	1
2	Condenser Assy	01101289	1
3	Axial Flow Fan	10331004	1
4	Flow Guide Loop	10371215	1
5	Diversion Circle Cover	01251028P	1
6	Diversion Circle	10371213	1
7	Mid Clapboard Assy	01231154	1
8	Mid-connect board	01381004	2
9	Air Inlet Door Sub-assy	01441015	1
10	Filter Sub-Assy	11121213	1
11	Door thread	02121014	1
12	Lower cover of hand lever	26231155	1
13	Hand lever	26231153	1
14	Upper cover of hand lever	26231154	1
15	Outer support sub-assy (left)	01701038	1
16	Top Cover Plate Sub-Assy	01251013	1
17	Helicoid Tongue sub-assy	02121028P	1
18	Rear grill	01471017	1
19	Left side board of duct	02121024P	1
20	Bearing Holder sub-assy	26151139	1
21	Cross Flow Fan	10351002	1
22	Electric Heater	3200000201	1
23	Tube Sensor	390002073	1
24	Evaporator Assy	0100106601	1
25	Front Panel Assy	20001475	1
26	Air Outlet Grille	22411023	1
27	Press board of filter 1	26111139	1
28	Press board of filter 2	26111140	1
29	Press board of filter 3	26111141	1
30	Front Panel	20001457	1
31	Front panel clip	02111013	2
32	LCD Cover	20121097	1
33	Membrane	63061309	1
34	Filter	11121212	2
35	Remote Control Cover	20121070	1
36	Wiring terminal	42010037	1
37	Display Board	30562029	1
38	Main board 1	30132043	1
39	Main board 2	30132040	1
40	Capacitor CBB61	33010089	1
41	Capacitor CBB61	33010025	1
42	Fan Motor	1501180202	1
43	Motor Support Sub-Assy	01701014P	1
44	Right side board of duct	02121023P	1
45	Mid-Clapboard	01231079P	1
46	Capillary Sub-assy	03001536	1

47	Outer support sub-assy (right)	01701039	1
48	Fan Motor	1501180303	1
49	Compressor and fittings	00101331	1
50	Discharge Tube 1	03611857	1
51	Overload Protector	00181145	1
52	Inhalation Tube 1	03621688	1
53	Drainage Valve	07101001	1
54	Power Cord	400203632	1
55	Chassis Sub-assy	0120102601P	1
56	Foam (water tray)	12411904	1
57	Thermal baffle	02121012	1
58	Electric Box Assy	2010129801	1
59	Capacitor CBB65	33010045	1
60	Terminal Board	42011103	1
61	Transformer	43110270	1
62	Wiring terminal	42010039S	1

Above data is subject to change without notice.

GAA07AB-D3RNB2A(CC060001800, CC060001803, CC060001805)
GAA09AB-D3RNB2A(CC060002000, CC060002003, CC060002005, CC060002007, CC060002008)
GAA12AB-D3RNB2A(CC060002200, CC060002203, CC060002205)
GAA15AB-D3RNB2A(CC060021500, CC060021501)
GAA12AB-D3RNB2B(CC060002400, CC060002403, CC060002405)
GAA15AB-D3RNB2B(CC060002600, CC060002603, CC060002605)
GAA07AB-D3RNB3A(CC060024100)
GAA15AB-D3RNB3B(CC060024200)

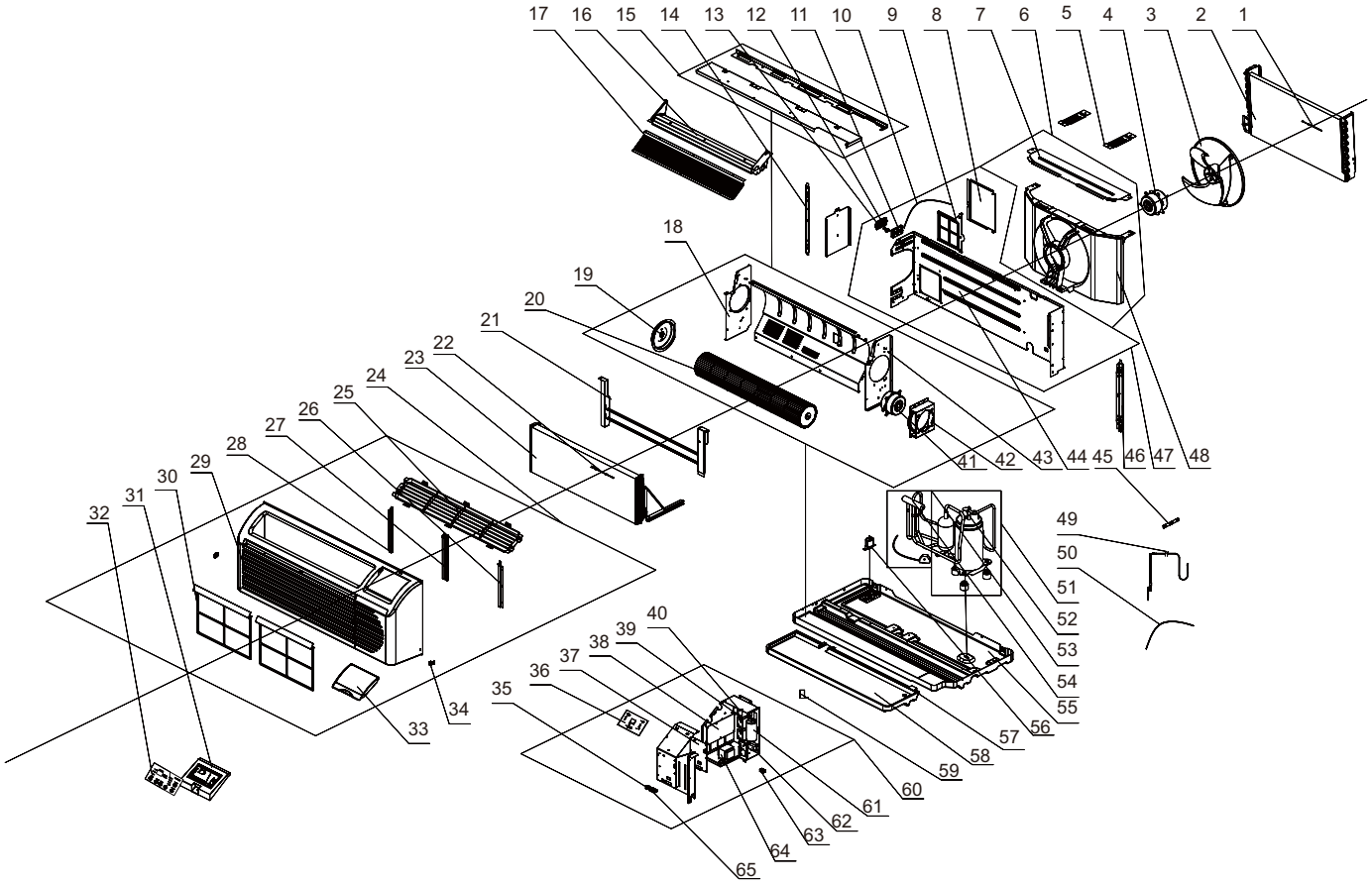

NO.	Description	Part Code		Qty
		GAA07AB-D3RNB2A	GAA09AB-D3RNB2A	
	Product Code	CC060001800	CC060002000	
1	Ambient Temperature Sensor	3900012123	3900012123	1
2	Condenser Assy	01101289	01101348	1
3	Axial Flow Fan	10331004	10331004	1
4	Fan Motor	150110343	150110343	1
5	Mid-connect board	01381004	01381004	2
6	Flow Guide Loop	10371215	10371215	1
7	Diversion Circle Cover	01251028P	01251028P	1
8	Air Inlet Door Sub-assy	01441015	01441015	1
9	Filter Sub-Assy	11121213	11121213	1
10	Door thread	02121014	02121014	1
11	Lower cover of hand lever	26231155	26231155	1
12	Hand lever	26231153	26231153	1
13	Upper cover of hand lever	26231154	26231154	1
14	Outer support sub-assy (left)	01701015	01701015	1
15	Top Cover Plate Sub-Assy	01251013	01251013	1
16	Helicoid Tongue sub-assy	02121028P	02121028P	1
17	Rear grill	01471017	01471017	1
18	Left side board of duct	02121024P	02121024P	1
19	Bearing Holder sub-assy	26151139	26151139	1
20	Cross Flow Fan	10351002	10351002	1
21	Electric Heater	3200000201	3200000201	1
22	Tube Sensor	390001921	390001921	1
23	Evaporator Assy	0100106601	0100128401	1
24	Front Panel Assy	20001475	20001475	1
25	Air Outlet Grille	22411153	22411153	1
26	Press board of filter 1	26111139	26111139	1
27	Press board of filter 2	26111140	26111140	1
28	Press board of filter 3	26111141	26111141	1
29	Front Panel	20001457	20001457	1
30	Filter	11121212	11121212	2
31	LCD Cover	20121097	20121097	1
32	Membrane	63061309	63061309	1
33	Remote Control Cover	20121070	20121070	1
34	Front panel clip	02111013	02111013	2
35	Wiring terminal	42010037	42010037	1
36	Display Board	30562029	30562029	1
37	Main board 1	30132041	30132041	1
38	Main board 2	30132043	30132043	1
39	Capacitor CBB61	33010089	33010035	1
40	Capacitor CBB61	33010025	33010025	1
41	Fan Motor	1501180202	15011802	1
42	Motor Support Sub-Assy	01701014P	01701014P	1
43	Right side board of duct	02121023P	02121023P	1
44	Mid-Clapboard	01231079P	01231079P	1
45	One way Valve	07133001	07133001	1
46	Outer support sub-assy (right)	01701016	01701016	1

47	Mid Clapboard Assy	01231154	01231154	1
48	Diversion Circle	10371213	10371213	1
49	Capillary Sub-assy	03001765	03001767	1
50	Power Cord	400203632	400203632	1
51	Compressor and fittings	00101061	00101049	1
52	Overload Protector	00180303	/	1
53	4-Way Valve Assy	03021222	03021221	1
54	4-way Valve	430004022	430004022	1
55	Chassis Sub-assy	0120102601P	0120102603P	1
56	Drainage Valve	07100164	07100164	1
57	Foam (water tray)	12411904	12411904	1
58	Thermal baffle	02121012	02121012	1
59	Magnet Coil	4300040042	4300040042	1
60	Electric Box Assy	2010129802	2010129804	1
61	Capacitor CBB65	33010045	33000017	1
62	Terminal Board	42011103	42011103	1
63	Radiator	49010252	49010252	1
64	Transformer	43110270	43110270	1
65	Wiring terminal	42010039S	42010039S	1

Above data is subject to change without notice.

NO.	Description	Part Code		Qty
		GAA12AB-D3RNB2A	GAA12AB-D3RNB2B	
	Product Code	CC060002200	CC060002400	
1	Ambient Temperature Sensor	3900012123	3900012123	1
2	Condenser Assy	01101348	01101348	1
3	Axial Flow Fan	10331004	10331004	1
4	Fan Motor	15011047	15011047	1
5	Mid-connect board	01381004	01381004	2
6	Flow Guide Loop	10371215	10371215	1
7	Diversion Circle Cover	01251028P	01251028P	1
8	Air Inlet Door Sub-assy	01441015	01441015	1
9	Filter Sub-Assy	11121213	11121213	1
10	Door thread	02121014	02121014	1
11	Lower cover of hand lever	26231155	26231155	1
12	Hand lever	26231153	26231153	1
13	Upper cover of hand lever	26231154	26231154	1
14	Outer support sub-assy (left)	01701015	01701015	1
15	Top Cover Plate Sub-Assy	01251013	01251013	1
16	Helicoid Tongue sub-assy	02121028P	02121028P	1
17	Rear grill	01471017	01471017	1
18	Left side board of duct	02121024P	02121024P	1
19	Bearing Holder sub-assy	26151139	26151139	1
20	Cross Flow Fan	10351002	10351002	1
21	Electric Heater	3200000201	32000002	1
22	Tube Sensor	390001921	390001921	1
23	Evaporator Assy	0100128501	0100128501	1
24	Front Panel Assy	20001475	20001475	1
25	Air Outlet Grille	22411153	22411153	1
26	Press board of filter 1	26111139	26111139	1
27	Press board of filter 2	26111140	26111140	1
28	Press board of filter 3	26111141	26111141	1
29	Front Panel	20001457	20001457	1
30	Filter	11121212	11121212	2
31	LCD Cover	20121097	20121097	1
32	Membrane	63061309	63061309	1
33	Remote Control Cover	20121070	20121070	1
34	Front panel clip	02111013	02111013	2
35	Wiring terminal	42010037	42010037	1
36	Display Board	30562029	30562029	1
37	Main board 1	30132041	30132041	1
38	Main board 2	30132043	30132072	1
39	Capacitor CBB61	33010089	33010089	1
40	Capacitor CBB61	33010026	33010026	1
41	Fan Motor	1501180203	1501180203	1
42	Motor Support Sub-Assy	01701014P	01701014P	1
43	Right side board of duct	02121023P	02121023P	1
44	Mid-Clapboard	01231079P	01231079P	1
45	One way Valve	/	/	/
46	Outer support sub-assy (right)	01701016	01701016	1

47	Mid Clapboard Assy	01231154	01231154	1
48	Diversion Circle	10371213	10371213	1
49	Capillary Sub-assy	03001139	03001139	1
50	Power Cord	400203632	4002056001	1
51	Compressor and fittings	00101087	00101087	1
52	Overload Protector	00181071	00181071	1
53	4-Way Valve Assy	03021223	03021223	1
54	4-way Valve	430004032	430004032	1
55	Chassis Sub-assy	0120102607P	0120102607P	1
56	Drainage Valve	07100164	07100164	1
57	Foam (water tray)	12411904	12411904	1
58	Thermal baffle	02121012	02121012	1
59	Magnet Coil	4300040042	4300040042	1
60	Electric Box Assy	2010129806	2010129808	1
61	Capacitor CBB65	33000017	33000017	1
62	Terminal Board	42011103	42011103	1
63	Radiator	49010252	49010252	1
64	Transformer	43110270	43110270	1
65	Wiring terminal	42010039S	42010039S	1

Above data is subject to change without notice.

NO.	Description	Part Code		Qty
		GAA15AB-D3RNB2B		
	Product Code	CC060002600	CC060002605	
1	Ambient Temperature Sensor	3900012123	3900012123	1
2	Condenser Assy	01101191	0110119103	1
3	Axial Flow Fan	10331004	10331004	1
4	Fan Motor	15011048	1501104710	1
5	Mid-connect board	01381004	01381004	2
6	Flow Guide Loop	10371215	10371215	1
7	Diversion Circle Cover	01251028P	01251028P	1
8	Air Inlet Door Sub-assy	01441015	01441015	1
9	Filter Sub-Assy	11121213	11121213	1
10	Door thread	02121014	02121014	1
11	Lower cover of hand lever	26231155	26231155	1
12	Hand lever	26231153	26231153	1
13	Upper cover of hand lever	26231154	26231154	1
14	Outer support sub-assy (left)	01701015	01701018	1
15	Top Cover Plate Sub-Assy	01251013	01251013P	1
16	Helicoid Tongue sub-assy	02121028P	02121028P	1
17	Rear grill	01471017	01471017	1
18	Left side board of duct	02121024P	02121024P	1
19	Bearing Holder sub-assy	26151139	26151139	1
20	Cross Flow Fan	10351002	10351002	1
21	Electric Heater	32000002	32000002	1
22	Tube Sensor	390001921	390000596	1
23	Evaporator Assy	0100128501	0100128501	1
24	Front Panel Assy	20001475	2000147502	1
25	Air Outlet Grille	22411153	2241102301	1
26	Press board of filter 1	26111139	2611113901	1
27	Press board of filter 2	26111140	2611114001	1
28	Press board of filter 3	26111141	2611114101	1
29	Front Panel	20001457	2000145702	1
30	Filter	11121212	1112121201	2
31	LCD Cover	20121097	2012109701	1
32	Membrane	63061309	63061309	1
33	Remote Control Cover	20121070	2012107001	1
34	Front panel clip	02111013	02111013	2
35	Wiring terminal	42010037	42010037	1
36	Display Board	30562029	30562029	1
37	Main board 1	30132041	30132041	1
38	Main board 2	30132072	30132072	1
39	Capacitor CBB61	1501180203	1501180203	1
40	Capacitor CBB61	01701014P	01701014P	1
41	Fan Motor	02121023P	02121023P	1
42	Motor Support Sub-Assy	01231079P	01231079P	1
43	Right side board of duct	07133001	07133001	1
44	Mid-Clapboard	01701016	01701019	1
45	One way Valve	01231154	0123115401	1
46	Outer support sub-assy (right)	10371213	10371213	1

47	Mid Clapboard Assy	03001434	03001434	1
48	Diversion Circle	4002056001	4002056001	1
49	Capillary Sub-assy	00101085	00101085	1
50	Power Cord	00180326	00180326	1
51	Compressor and fittings	03021187	03021187	1
52	Overload Protector	430004032	430004032	1
53	4-Way Valve Assy	01201026P	01201026P	1
54	4-way Valve	07100164	07100164	1
55	Chassis Sub-assy	12411904	12411904	1
56	Drainage Valve	02121012	02121012	1
57	Foam (water tray)	4300040042	4300040022	1
58	Thermal baffle	20101298	20101298	1
59	Magnet Coil	33000045	33000045	1
60	Electric Box Assy	42011103	42011103	1
61	Capacitor CBB65	49010252	49010252	1
62	Terminal Board	43110270	43110270	1
63	Radiator	42010039S	42010039S	1
64	Transformer	43110270	43110270	1
65	Wiring terminal	42010039S	42010039S	1

Above data is subject to change without notice.

NO.	Description	Part Code		Qty
		GAA07AB-D3RNB2A	GAA09AB-D3RNB2A	
	Product Code	CC060001805	CC060002005	
1	Ambient Temperature Sensor	3900012123	3900012123	1
2	Condenser Assy	0110109701	01101099	1
3	Axial Flow Fan	10331004	10331004	1
4	Fan Motor	150110343	150110343	1
5	Mid-connect board	01381004	01381004	2
6	Flow Guide Loop	10371215	10371215	1
7	Diversion Circle Cover	01251028P	01251028P	1
8	Air Inlet Door Sub-assy	01441015	01441015	1
9	Filter Sub-Assy	11121213	11121213	1
10	Door thread	02121014	02121014	1
11	Lower cover of hand lever	26231155	26231155	1
12	Hand lever	26231153	26231153	1
13	Upper cover of hand lever	26231154	26231154	1
14	Outer support sub-assy (left)	01701018	01701018	1
15	Top Cover Plate Sub-Assy	01251013P	01251013P	1
16	Helicoid Tongue sub-assy	02121028P	02121028P	1
17	Rear grill	01471017	01471017	1
18	Left side board of duct	02121024P	02121024P	1
19	Bearing Holder sub-assy	26151139	26151139	1
20	Cross Flow Fan	10351002	10351002	1
21	Electric Heater	3200000201	3200000201	1
22	Tube Sensor	390000596	390000596	1
23	Evaporator Assy	0100106601	0100128401	1
24	Front Panel Assy	2000147502	2000147502	1
25	Air Outlet Grille	2241102301	2241102301	1
26	Press board of filter 1	2611113901	2611113901	1
27	Press board of filter 2	2611114001	2611114001	1
28	Press board of filter 3	2611114101	2611114101	1
29	Front Panel	2000145702	2000145702	1
30	Filter	1112121201	1112121201	2
31	LCD Cover	20121097	2012109701	1
32	Membrane	63061309	63061309	1
33	Remote Control Cover	2012107001	2012107001	1
34	Front panel clip	02111013	02111013	2
35	Wiring terminal	42010037	42010037	1
36	Display Board	30562029	30562029	1
37	Main board 1	30132041	30132041	1
38	Main board 2	30132043	30132043	1
39	Capacitor CBB61	33000064	33010089	1
40	Capacitor CBB61	33010025	33010025	1
41	Fan Motor	15011802	15011802	1
42	Motor Support Sub-Assy	01701014P	01701014P	1
43	Right side board of duct	02121023P	02121023P	1
44	Mid-Clapboard	01231079P	01231079P	1
45	One way Valve	07133001	07133001	1
46	Outer support sub-assy (right)	01701019	01701019	1

47	Mid Clapboard Assy	0123115401	0123115401	1
48	Diversion Circle	10371213	10371213	1
49	Capillary Sub-assy	03001765	03001767	1
50	Power Cord	400203632	400203632	1
51	Compressor and fittings	00101061	00101049	1
52	Overload Protector	00180303	/	1
53	4-Way Valve Assy	03021222	03021221	1
54	4-way Valve	430004022	430004022	1
55	Chassis Sub-assy	0120102601P	0120102603P	1
56	Drainage Valve	07100164	07100164	1
57	Foam (water tray)	12411904	12411904	1
58	Thermal baffle	02121012	02121012	1
59	Magnet Coil	4300040022	4300040022	1
60	Electric Box Assy	2010129802	2010129804	1
61	Capacitor CBB65	33010045	33000017	1
62	Terminal Board	42011103	42011103	1
63	Radiator	49010252	49010252	1
64	Transformer	43110270	43110270	1
65	Wiring terminal	42010039S	42010039S	1

Above data is subject to change without notice.

NO.	Description	Part Code		Qty
		GAA12AB-D3RNB2A	GAA12AB-D3RNB2B	
	Product Code	CC060002205	CC060002405	
1	Ambient Temperature Sensor	3900012123	3900012123	1
2	Condenser Assy	01101099	01101099	1
3	Axial Flow Fan	10331004	10331004	1
4	Fan Motor	15011047	15011047	1
5	Mid-connect board	01381004	01381004	2
6	Flow Guide Loop	10371215	10371215	1
7	Diversion Circle Cover	01251028P	01251028P	1
8	Air Inlet Door Sub-assy	01441015	01441015	1
9	Filter Sub-Assy	11121213	11121213	1
10	Door thread	02121014	02121014	1
11	Lower cover of hand lever	26231155	26231155	1
12	Hand lever	26231153	26231153	1
13	Upper cover of hand lever	26231154	26231154	1
14	Outer support sub-assy (left)	01701018	01701018	1
15	Top Cover Plate Sub-Assy	01251013P	01251013P	1
16	Helicoid Tongue sub-assy	02121028P	02121028P	1
17	Rear grill	01471017	01471017	1
18	Left side board of duct	02121024P	02121024P	1
19	Bearing Holder sub-assy	26151139	26151139	1
20	Cross Flow Fan	10351002	10351002	1
21	Electric Heater	3200000201	32000002	1
22	Tube Sensor	390000596	390000596	1
23	Evaporator Assy	0100128501	0100128501	1
24	Front Panel Assy	2000147502	2000147502	1
25	Air Outlet Grille	2241102301	2241102301	1
26	Press board of filter 1	2611113901	2611113901	1
27	Press board of filter 2	2611114001	2611114001	1
28	Press board of filter 3	2611114101	2611114101	1
29	Front Panel	2000145702	2000145702	1
30	Filter	1112121201	1112121201	2
31	LCD Cover	2012109701	2012109701	1
32	Membrane	63061309	63061309	1
33	Remote Control Cover	2012107001	2012107001	1
34	Front panel clip	02111013	02111013	2
35	Wiring terminal	42010037	42010037	1
36	Display Board	30562029	30562029	1
37	Main board 1	30132041	30132041	1
38	Main board 2	30132043	30132072	1
39	Capacitor CBB61	33010089	33010089	1
40	Capacitor CBB61	33010026	33010026	1
41	Fan Motor	1501180203	1501180203	1
42	Motor Support Sub-Assy	01701014P	01701014P	1
43	Right side board of duct	02121023P	02121023P	1
44	Mid-Clapboard	01231079P	01231079P	1
45	One way Valve	/	/	/
46	Outer support sub-assy (right)	01701019	01701019	1

47	Mid Clapboard Assy	0123115401	0123115401	1
48	Diversion Circle	10371213	10371213	1
49	Capillary Sub-assy	03001139	03001139	1
50	Power Cord	400203632	4002056001	1
51	Compressor and fittings	00101087	00101087	1
52	Overload Protector	00181071	00181071	1
53	4-Way Valve Assy	03021223	03021223	1
54	4-way Valve	430004032	430004032	1
55	Chassis Sub-assy	0120102607P	0120102607P	1
56	Drainage Valve	07100164	07100164	1
57	Foam (water tray)	12411904	12411904	1
58	Thermal baffle	02121012	02121012	1
59	Magnet Coil	4300040022	4300040022	1
60	Electric Box Assy	2010129806	2010129808	1
61	Capacitor CBB65	33000018	33000018	1
62	Terminal Board	42011103	42011103	1
63	Radiator	49010252	49010252	1
64	Transformer	43110270	43110270	1
65	Wiring terminal	42010039S	42010039S	1

Above data is subject to change without notice.

NO.	Description	Part Code		Qty
		GAA07AB-D3RNB2A	GAA09AB-D3RNB2A	
	Product Code	CC060001803	CC060002003	
1	Ambient Temperature Sensor	3900012123	3900012123	1
2	Condenser Assy	01101289	01101348	1
3	Axial Flow Fan	10331004	10331004	1
4	Fan Motor	150110343	150110343	1
5	Mid-connect board	01381004	01381004	2
6	Flow Guide Loop	10371215	10371215	1
7	Diversion Circle Cover	01251028P	01251028P	1
8	Air Inlet Door Sub-assy	01441015	01441015	1
9	Filter Sub-Assy	11121213	11121213	1
10	Door thread	02121014	02121014	1
11	Lower cover of hand lever	26231155	26231155	1
12	Hand lever	26231153	26231153	1
13	Upper cover of hand lever	26231154	26231154	1
14	Outer support sub-assy (left)	01701015	01701015	1
15	Top Cover Plate Sub-Assy	01251013	01251013	1
16	Helicoid Tongue sub-assy	02121028P	02121028P	1
17	Rear grill	01471017	01471017	1
18	Left side board of duct	02121024P	02121024P	1
19	Bearing Holder sub-assy	26151139	26151139	1
20	Cross Flow Fan	10351002	10351002	1
21	Electric Heater	3200000201	3200000201	1
22	Tube Sensor	390001921	390001921	1
23	Evaporator Assy	0100106601	0100128401	1
24	Front Panel Assy	2000147502	2000147502	1
25	Air Outlet Grille	2241102301	2241102301	1
26	Press board of filter 1	2611113901	2611113901	1
27	Press board of filter 2	2611114001	2611114001	1
28	Press board of filter 3	2611114101	2611114101	1
29	Front Panel	2000145702	2000145702	1
30	Filter	1112121201	1112121201	2
31	LCD Cover	2012109701	2012109701	1
32	Membrane	63061309	63061309	1
33	Remote Control Cover	2012107001	2012107001	1
34	Front panel clip	2111013	02111013	2
35	Wiring terminal	42010037	42010037	1
36	Display Board	30562029	30562029	1
37	Main board 1	30132041	30132041	1
38	Main board 2	30132043	30132043	1
39	Capacitor CBB61	33010089	33010035	1
40	Capacitor CBB61	33010025	33010025	1
41	Fan Motor	1501180202	15011802	1
42	Motor Support Sub-Assy	01701014P	01701014P	1
43	Right side board of duct	02121023P	02121023P	1
44	Mid-Clapboard	01231079P	01231079P	1
45	One way Valve	07133001	07133001	1
46	Outer support sub-assy (right)	01701016	01701016	1

47	Mid Clapboard Assy	01231154	01231154	1
48	Diversion Circle	10371213	10371213	1
49	Capillary Sub-assy	03001765	03001767	1
50	Power Cord	400203632	400203632	1
51	Compressor and fittings	00101061	00101049	1
52	Overload Protector	0180303	/	1
53	4-Way Valve Assy	3021222	3021221	1
54	4-way Valve	430004022	430004022	1
55	Chassis Sub-assy	0120102601P	0120102603P	1
56	Drainage Valve	7100164	7100164	1
57	Foam (water tray)	12411904	12411904	1
58	Thermal baffle	2121012	2121012	1
59	Magnet Coil	4300040042	4300040042	1
60	Electric Box Assy	2010129802	2010129804	1
61	Capacitor CBB65	33010045	33000017	1
62	Terminal Board	42011103	42011103	1
63	Radiator	49010252	49010252	1
64	Transformer	43110270	43110270	1
65	Wiring terminal	42010039S	42010039S	1

Above data is subject to change without notice.

NO.	Description	Part Code		Qty
		GAA12AB-D3RNB2A	GAA12AB-D3RNB2B	
	Product Code	CC060002203	CC060002403	
1	Ambient Temperature Sensor	3900012123	3900012123	1
2	Condenser Assy	01101348	01101348	1
3	Axial Flow Fan	10331004	10331004	1
4	Fan Motor	15011047	15011047	1
5	Mid-connect board	01381004	01381004	2
6	Flow Guide Loop	10371215	10371215	1
7	Diversion Circle Cover	01251028P	01251028P	1
8	Air Inlet Door Sub-assy	01441015	01441015	1
9	Filter Sub-Assy	11121213	11121213	1
10	Door thread	02121014	02121014	1
11	Lower cover of hand lever	26231155	26231155	1
12	Hand lever	26231153	26231153	1
13	Upper cover of hand lever	26231154	26231154	1
14	Outer support sub-assy (left)	01701015	01701015	1
15	Top Cover Plate Sub-Assy	01251013	01251013	1
16	Helicoid Tongue sub-assy	02121028P	02121028P	1
17	Rear grill	01471017	01471017	1
18	Left side board of duct	02121024P	02121024P	1
19	Bearing Holder sub-assy	26151139	26151139	1
20	Cross Flow Fan	10351002	10351002	1
21	Electric Heater	3200000201	32000002	1
22	Tube Sensor	390001921	390001921	1
23	Evaporator Assy	0100128501	0100128501	1
24	Front Panel Assy	2000147502	2000147502	1
25	Air Outlet Grille	2241102301	2241102301	1
26	Press board of filter 1	2611113901	2611113901	1
27	Press board of filter 2	2611114001	2611114001	1
28	Press board of filter 3	2611114101	2611114101	1
29	Front Panel	2000145702	2000145702	1
30	Filter	1112121201	1112121201	2
31	LCD Cover	2012109701	2012109701	1
32	Membrane	63061309	63061309	1
33	Remote Control Cover	2012107001	2012107001	1
34	Front panel clip	02111013	02111013	2
35	Wiring terminal	42010037	42010037	1
36	Display Board	30562029	30562029	1
37	Main board 1	30132041	30132041	1
38	Main board 2	30132043	30132072	1
39	Capacitor CBB61	33010089	33010089	1
40	Capacitor CBB61	33010026	33010026	1
41	Fan Motor	1501180203	1501180203	1
42	Motor Support Sub-Assy	01701014P	01701014P	1
43	Right side board of duct	02121023P	02121023P	1
44	Mid-Clapboard	01231079P	01231079P	1
45	One way Valve	/	/	/
46	Outer support sub-assy (right)	01701016	01701016	1

47	Mid Clapboard Assy	01231154	01231154	1
48	Diversion Circle	10371213	10371213	1
49	Capillary Sub-assy	03001139	03001139	1
50	Power Cord	400203632	4002056001	1
51	Compressor and fittings	00101087	00101087	1
52	Overload Protector	00181071	00181071	1
53	4-Way Valve Assy	03021223	03021223	1
54	4-way Valve	430004032	430004032	1
55	Chassis Sub-assy	0120102607P	0120102607P	1
56	Drainage Valve	07100164	07100164	1
57	Foam (water tray)	12411904	12411904	1
58	Thermal baffle	02121012	02121012	1
59	Magnet Coil	4300040042	4300040042	1
60	Electric Box Assy	2010129806	2010129808	1
61	Capacitor CBB65	33000017	33000017	1
62	Terminal Board	42011103	42011103	1
63	Radiator	49010252	49010252	1
64	Transformer	43110270	43110270	1
65	Wiring terminal	42010039S	42010039S	1

Above data is subject to change without notice.

NO.	Description	Part Code		Qty
		GAA15AB-D3RNB2A	GAA15AB-D3RNB2B	
	Product Code	CC060021500	CC060002603	
1	Ambient Temperature Sensor	3900012123	3900012123	1
2	Condenser Assy	01101191	01101191	1
3	Axial Flow Fan	10331004	10331004	1
4	Fan Motor	15011048	15011048	1
5	Mid-connect board	01381004	01381004	2
6	Flow Guide Loop	10371215	10371215	1
7	Diversion Circle Cover	01251028P	01251028P	1
8	Air Inlet Door Sub-assy	01441015	01441015	1
9	Filter Sub-Assy	11121213	11121213	1
10	Door thread	02121014	02121014	1
11	Lower cover of hand lever	26231155	26231155	1
12	Hand lever	26231153	26231153	1
13	Upper cover of hand lever	26231154	26231154	1
14	Outer support sub-assy (left)	01701015	01701015	1
15	Top Cover Plate Sub-Assy	01251013	01251013	1
16	Helicoid Tongue sub-assy	02121028P	02121028P	1
17	Rear grill	01471017	01471017	1
18	Left side board of duct	02121024P	02121024P	1
19	Bearing Holder sub-assy	26151139	26151139	1
20	Cross Flow Fan	10351002	10351002	1
21	Electric Heater	3200000201	32000002	1
22	Tube Sensor	390001921	390001921	1
23	Evaporator Assy	0100128501	0100128501	1
24	Front Panel Assy	20001475	2000147502	1
25	Air Outlet Grille	22411153	2241102301	1
26	Press board of filter 1	26111139	2611113901	1
27	Press board of filter 2	26111140	2611114001	1
28	Press board of filter 3	26111141	2611114101	1
29	Front Panel	20001457	2000145702	1
30	Filter	11121212	1112121201	2
31	LCD Cover	20121097	2012109701	1
32	Membrane	63061309	63061309	1
33	Remote Control Cover	20121070	2012107001	1
34	Front panel clip	02111013	02111013	2
35	Wiring terminal	42010037	42010037	1
36	Display Board	30562029	30562029	1
37	Main board 1	30132072	30132072	1
38	Main board 2	30132041	30132041	1
39	Capacitor CBB61	33010089	33010089	1
40	Capacitor CBB61	33010026	33010026	1
41	Fan Motor	1501180203	1501180203	1
42	Motor Support Sub-Assy	01701014P	01701014P	1
43	Right side board of duct	02121023P	02121023P	1
44	Mid-Clapboard	01231079P	01231079P	1
45	One way Valve	07133001	07133001	1
46	Outer support sub-assy (right)	01701016	01701016	1

47	Mid Clapboard Assy	01231154	01231154	1
48	Diversion Circle	10371213	10371213	1
49	Capillary Sub-assy	03001434	03001434	1
50	Power Cord	4002056001	4002056001	1
51	Compressor and fittings	00101085	00101085	1
52	Overload Protector	00180326	00180326	1
53	4-Way Valve Assy	03021187	03021187	1
54	4-way Valve	430004032	430004032	1
55	Chassis Sub-assy	01201026P	01201026P	1
56	Drainage Valve	07100164	07100164	1
57	Foam (water tray)	12411904	12411904	1
58	Thermal baffle	02121012	02121012	1
59	Magnet Coil	4300040042	4300040042	1
60	Electric Box Assy	20101298	20101298	1
61	Capacitor CBB65	33000045	33000045	1
62	Terminal Board	42011103	42011103	1
63	Radiator	49010252	49010252	1
64	Transformer	43110270	43110270	1
65	Wiring terminal	42010039S	42010039S	1

Above data is subject to change without notice.

NO.	Description	Part Code	Qty
		GAA15AB-D3RNB2A	
	Product Code	CC060021501	
1	Ambient Temperature Sensor	3900012123	1
2	Condenser Assy	0110119102	1
3	Axial Flow Fan	10331004	1
4	Fan Motor	15011048	1
5	Mid-connect board	01381004P	2
6	Flow Guide Loop	10371215	1
7	Diversion Circle Cover	01251028P	1
8	Air Inlet Door Sub-assy	01441015	1
9	Filter Sub-Assy	11121213	1
10	Door thread	02121014	1
11	Lower cover of hand lever	26231155	1
12	Hand lever	26231153	1
13	Upper cover of hand lever	26231154	1
14	Outer support sub-assy (left)	01701015	1
15	Top Cover Plate Sub-Assy	01251013P	1
16	Helicoid Tongue sub-assy	02121028P	1
17	Rear grill	01471017	1
18	Left side board of duct	02121024P	1
19	Bearing Holder sub-assy	26151139	1
20	Cross Flow Fan	10351002	1
21	Electric Heater	3200000201	1
22	Tube Sensor	390001921	1
23	Evaporator Assy	0100128501	1
24	Front Panel Assy	20001475	1
25	Air Outlet Grille	22411153	1
26	Press board of filter 1	26111139	1
27	Press board of filter 2	26111140	1
28	Press board of filter 3	26111141	1
29	Front Panel	20001457	1
30	Filter	11121212	2
31	LCD Cover	20121097	1
32	Membrane	63061309	1
33	Remote Control Cover	20121070	1
34	Front panel clip	02111013	2
35	Wiring terminal	42010037	1
36	Display Board	30562029	1
37	Main board 1	30132072	1
38	Main board 2	30132041	1
39	Capacitor CBB61	33010089	1
40	Capacitor CBB61	33010026	1
41	Fan Motor	1501180203	1
42	Motor Support Sub-Assy	01701014P	1
43	Right side board of duct	02121023P	1
44	Mid-Clapboard	01231079P	1
45	One way Valve	07133001	1
46	Outer support sub-assy (right)	01701016	1

47	Mid Clapboard Assy	01231154	1
48	Diversion Circle	10371213	1
49	Capillary Sub-assy	03001434	1
50	Power Cord	4002056001	1
51	Compressor and fittings	00101085	1
52	Overload Protector	00180326	1
53	4-Way Valve Assy	03021187	1
54	4-way Valve	430004032	1
55	Chassis Sub-assy	01201026P	1
56	Drainage Valve	07100164	1
57	Foam (water tray)	12411904	1
58	Thermal baffle	02121012	1
59	Magnet Coil	4300040042	1
60	Electric Box Assy	20101298	1
61	Capacitor CBB65	33000045	1
62	Terminal Board	42011103	1
63	Radiator	49010252	1
64	Transformer	43110270	1
65	Wiring terminal	42010039S	1

Above data is subject to change without notice.

NO.	Description	Part Code		Qty
		GAA09AB-D3RNB2A		
	Product Code	CC060002007	CC060002008	
1	Ambient Temperature Sensor	3900012123	3900012123	1
2	Condenser Assy	01101363	0110136301	1
3	Axial Flow Fan	10331004	10331004	1
4	Fan Motor	150110343	150110343	1
5	Mid-connect board	0138100401P	01381004	2
6	Flow Guide Loop	10371215	10371215	1
7	Diversion Circle Cover	01251028P	01251028P	1
8	Air Inlet Door Sub-assy	01441015	01441015	1
9	Filter Sub-Assy	11121213	11121213	1
10	Door thread	02121014	02121014	1
11	Lower cover of hand lever	26231155	26231155	1
12	Hand lever	26231153	26231153	1
13	Upper cover of hand lever	26231154	26231154	1
14	Outer support sub-assy (left)	01701038	01701038	1
15	Top Cover Plate Sub-Assy	01251013P	01251013	1
16	Helicoid Tongue sub-assy	02121028P	02121028P	1
17	Rear grill	01471017	01471017	1
18	Left side board of duct	02121024P	02121024P	1
19	Bearing Holder sub-assy	26151139	26151139	1
20	Cross Flow Fan	10351002	10351002	1
21	Electric Heater	3200000201	3200000201	1
22	Tube Sensor	390002073	390002073	1
23	Evaporator Assy	0100128401	0100128401	1
24	Front Panel Assy	2000147502	20001475	1
25	Air Outlet Grille	22411023	22411023	1
26	Press board of filter 1	26111139	26111139	1
27	Press board of filter 2	26111140	26111140	1
28	Press board of filter 3	26111141	26111141	1
29	Front Panel	20001457	20001457	1
30	Filter	11121212	11121212	2
31	LCD Cover	2012109701	20121097	1
32	Membrane	63061309	63061309	1
33	Remote Control Cover	20121070	20121070	1
34	Front panel clip	02111013	02111013	2
35	Wiring terminal	42010037	42010037	1
36	Display Board	30562029	30562029	1
37	Main board 1	30132043	30132043	1
38	Main board 2	30132041	30132041	1
39	Capacitor CBB61	3301074701	3301074701	1
40	Capacitor CBB61	3301074702	3301074702	1
41	Fan Motor	15011802	15011802	1
42	Motor Support Sub-Assy	01701014P	01701014P	1
43	Right side board of duct	02121023P	02121023P	1
44	Mid-Clapboard	01231079P	01231079P	1
45	One way Valve	/	/	/
46	Outer support sub-assy (right)	01701039	01701039	1

47	Mid Clapboard Assy	0123115401	01231154	1
48	Diversion Circle	10371213	10371213	1
49	Capillary Sub-assy	03001543	03001543	1
50	Power Cord	400203632	400203632	1
51	Compressor and fittings	00101323	00101323	1
52	Overload Protector	00181077	00181077	1
53	4-Way Valve Assy	03021237	03021237	1
54	4-way Valve	430004022	430004022	1
55	Chassis Sub-assy	0120102607P	0120102607P	1
56	Drainage Valve	07101001	07101001	1
57	Foam (water tray)	12411904	12411904	1
58	Thermal baffle	02121012	02121012	1
59	Magnet Coil	4300040022	4300040022	1
60	Electric Box Assy	2010129817	2010129817	1
61	Capacitor CBB65	33000081	33000081	1
62	Terminal Board	42011103	42011103	1
63	Radiator	49010252	49010252	1
64	Transformer	43110270	43110270	1
65	Wiring terminal	42010039S	42010039S	1

Above data is subject to change without notice.

NO.	Description	Part Code	Qty
		GAA07AB-D3RNB3A	
	Product Code	CC060024100	
1	Ambient Temperature Sensor	3900012123	1
2	Condenser Assy	01101272	1
3	Axial Flow Fan	10331004	1
4	Fan Motor	1501180202	1
5	Mid-connect board	01381004	2
6	Flow Guide Loop	10371215	1
7	Diversion Circle Cover	01251028P	1
8	Air Inlet Door Sub-assy	01441015	1
9	Filter Sub-Assy	11121213	1
10	Door thread	02121014	1
11	Lower cover of hand lever	26231155	1
12	Hand lever	26231153	1
13	Upper cover of hand lever	26231154	1
14	Outer support sub-assy (left)	01701038	1
15	Top Cover Plate Sub-Assy	01251013	1
16	Helicoid Tongue sub-assy	02121028P	1
17	Rear grill	01471017	1
18	Left side board of duct	02121024P	1
19	Bearing Holder sub-assy	26151139	1
20	Cross Flow Fan	10351002	1
21	Electric Heater	3200000201	1
22	Tube Sensor	390002073	1
23	Evaporator Assy	0100106601	1
24	Front Panel Assy	20001475	1
25	Air Outlet Grille	22411023	1
26	Press board of filter 1	26111139	1
27	Press board of filter 2	26111140	1
28	Press board of filter 3	26111141	1
29	Front Panel	20001457	1
30	Filter	11121212	2
31	LCD Cover	20121097	1
32	Membrane	63061309	1
33	Remote Control Cover	20121070	1
34	Front panel clip	02111013	2
35	Wiring terminal	42010037	1
36	Display Board	30562029	1
37	Main board 1	30132041	1
38	Main board 2	30132043	1
39	Capacitor CBB61	33010025	1
40	Capacitor CBB61	33010025	1
41	Fan Motor	1501180303	1
42	Motor Support Sub-Assy	01701014P	1
43	Right side board of duct	02121023P	1
44	Mid-Clapboard	01231079P	1
45	One way Valve	/	/
46	Outer support sub-assy (right)	01701039	1

47	Mid Clapboard Assy	01231154	1
48	Diversion Circle	10371213	1
49	Capillary Sub-assy	03001537	1
50	Power Cord	400203632	1
51	Compressor and fittings	00101331	1
52	Overload Protector	00181145	1
53	4-Way Valve Assy	03021193	1
54	4-way Valve	430004022	1
55	Chassis Sub-assy	0120102601P	1
56	Drainage Valve	07101001	1
57	Foam (water tray)	12411904	1
58	Thermal baffle	02121012	1
59	Magnet Coil	4300040022	1
60	Electric Box Assy	2010129816	1
61	Capacitor CBB65	33010045	1
62	Terminal Board	42011103	1
63	Radiator	49010252	1
64	Transformer	43110270	1
65	Wiring terminal	42010037	1

Above data is subject to change without notice.

NO.	Description	Part Code	Qty
		GAA15AB-D3RNB3B	
	Product Code	CC060024400	
1	Ambient Temperature Sensor	3900012123	1
2	Condenser Assy	01101191	1
3	Axial Flow Fan	10331004	1
4	Fan Motor	1501180203	1
5	Mid-connect board	01381004	2
6	Flow Guide Loop	10371215	1
7	Diversion Circle Cover	01251028P	1
8	Air Inlet Door Sub-assy	01441015	1
9	Filter Sub-Assy	11121213	1
10	Door thread	02121014	1
11	Lower cover of hand lever	26231155	1
12	Hand lever	26231153	1
13	Upper cover of hand lever	26231154	1
14	Outer support sub-assy (left)	01701038	1
15	Top Cover Plate Sub-Assy	01251013	1
16	Helicoid Tongue sub-assy	02121028P	1
17	Rear grill	01471017	1
18	Left side board of duct	02121024P	1
19	Bearing Holder sub-assy	26151139	1
20	Cross Flow Fan	10351002	1
21	Electric Heater	32000002	1
22	Tube Sensor	390002073	1
23	Evaporator Assy	0100128501	1
24	Front Panel Assy	20001475	1
25	Air Outlet Grille	22411023	1
26	Press board of filter 1	26111139	1
27	Press board of filter 2	26111140	1
28	Press board of filter 3	26111141	1
29	Front Panel	20001457	1
30	Filter	11121212	2
31	LCD Cover	20121097	1
32	Membrane	63061309	1
33	Remote Control Cover	20121070	1
34	Front panel clip	02111013	2
35	Wiring terminal	42010037	1
36	Display Board	30562029	1
37	Main board 1	30132041	1
38	Main board 2	30132072	1
39	Capacitor CBB61	33010026	1
40	Capacitor CBB61	33010026	1
41	Fan Motor	1501180310	1
42	Motor Support Sub-Assy	01701014P	1
43	Right side board of duct	02121023P	1
44	Mid-Clapboard	01231079P	1
45	One way Valve	07133001	1
46	Outer support sub-assy (right)	01701039	1

47	Mid Clapboard Assy	01231154	1
48	Diversion Circle	10371213	1
49	Capillary Sub-assy	03001531	1
50	Power Cord	4002056001	1
51	Compressor and fittings	00101233	1
52	Overload Protector	/	/
53	4-Way Valve Assy	03021021	1
54	4-way Valve	430004032	1
55	Chassis Sub-assy	0120102606P	1
56	Drainage Valve	07101001	1
57	Foam (water tray)	12411904	1
58	Thermal baffle	02121012	1
59	Magnet Coil	4300040022	1
60	Electric Box Assy	2010129815	1
61	Capacitor CBB65	3300008101	1
62	Terminal Board	42011103	1
63	Radiator	49010252	1
64	Transformer	43110270	1
65	Wiring terminal	42010039S	1

Above data is subject to change without notice.

GAE07AB-D3RNB2A(CC060001701), GAE09AB-D3RNB2A(CC060001901), GAE12AB-D3RNB2A(CC060002101)
GAE12AB-D3RNB2B(CC060002301), GAE15AB-D3RNB2B(CC060002501)

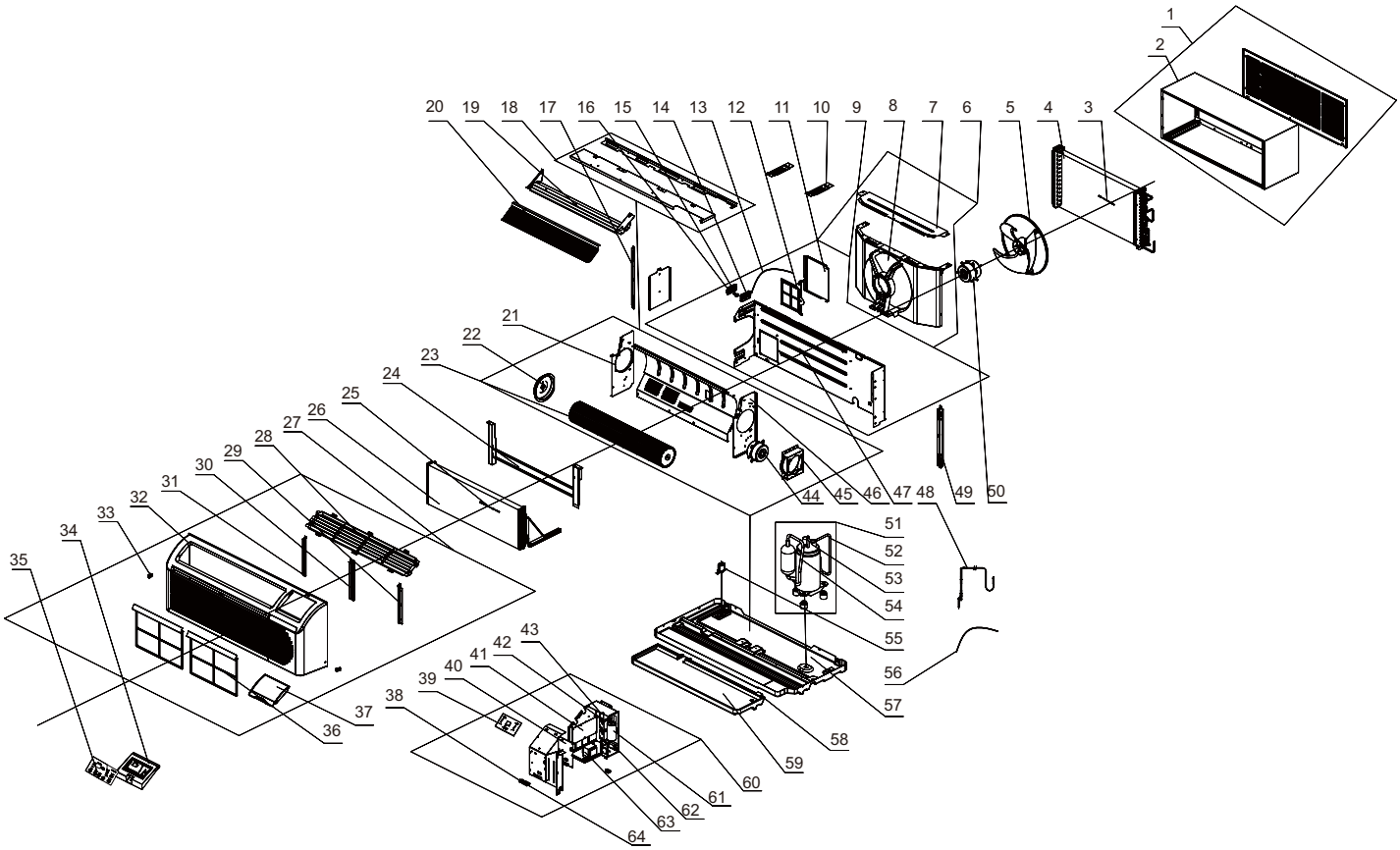

NO.	Description	Part Code		Qty
		GAE07AB-D3RNB2A	GAE09AB-D3RNB2A	
	Product Code	CC060001701	CC060001901	
1	Cabinet Assy	01431395	01431395	1
2	Cabinet Sub-assy	01431394P	01431394P	1
3	Ambient Temperature Sensor	3900012123	3900012123	1
4	Condenser Assy	01101289	01101348	1
5	Axial Flow Fan	10331004	10331004	1
6	Flow Guide Loop	10371215	10371215	1
7	Diversion Circle Cover	01251028P	01251028P	1
8	Diversion Circle	10371213	10371213	1
9	Mid Clapboard Assy	01231154	01231154	1
10	Mid-connect board	01381004	01381004	2
11	Air Inlet Door Sub-assy	01441015	01441015	1
12	Filter Sub-Assy	11121213	11121213	1
13	Door thread	02121014	02121014	1
14	Lower cover of hand lever	26231155	26231155	1
15	Hand lever	26231153	26231153	1
16	Upper cover of hand lever	26231154	26231154	1
17	Outer support sub-assy (left)	01701015	01701015	1
18	Top Cover Plate Sub-Assy	01251013	01251013	1
19	Helicoid Tongue sub-assy	02121028P	02121028P	1
20	Rear grill	01471017	01471017	1
21	Left side board of duct	02121024P	02121024P	1
22	Bearing Holder sub-assy	26151139	26151139	1
23	Cross Flow Fan	10351002	10351002	1
24	Electric Heater	3200000201	3200000201	1
25	Tube Sensor	390001921	390001921	1
26	Evaporator Assy	0100106601	0100106001	1
27	Front Panel Assy	20001475	20001475	1
28	Air Outlet Grille	22411153	22411153	1
29	Press board of filter 1	26111139	26111139	1
30	Press board of filter 2	26111140	26111140	1
31	Press board of filter 3	26111141	26111141	1
32	Front Panel	20001457	20001457	1
33	Front panel clip	02111013	02111013	2
34	LCD Cover	20121097	20121097	1
35	Membrane	63061309	63061309	1
36	Filter	11121212	11121212	2
37	Remote Control Cover	20121070	20121070	1
38	Wiring terminal	42010037	42010037	1
39	Display Board	30562029	30562029	1
40	Main board 1	30132040	30132040	1
41	Main board 2	30132043	30132043	1
42	Capacitor CBB61	33010089	33010035	1
43	Capacitor CBB61	33010025	33000017	1
44	Fan Motor	1501180202	15011802	1
45	Motor Support Sub-Assy	01701014P	01701014P	1
46	Right side board of duct	02121023P	02121023P	1

47	Mid-Clapboard	01231079P	01231079P	1
48	Capillary Sub-assy	03001764	03001766	1
49	Outer support sub-assy (right)	01701016	01701016	1
50	Fan Motor	150110343	150110343	1
51	Compressor and fittings	00101061	00101049	1
52	Discharge Tube 1	03611753	03611753	1
53	Overload Protector	00180303	/	1
54	Inhalation Tube 1	03621923	03621829	1
55	Drainage Valve	07100164	07100164	1
56	Power Cord	400203632	400203632	1
57	Chassis Sub-assy	0120102601P	0120102603P	1
58	Foam (water tray)	12411904	12411904	1
59	Thermal baffle	02121012	02121012	1
60	Electric Box Assy	2010129801	2010129803	1
61	Capacitor CBB65	33010045	33010045	1
62	Terminal Board	42011103	42011103	1
63	Transformer	43110270	43110270	1
64	Wiring terminal	42010039S	42010039S	1

Above data is subject to change without notice.

NO.	Description	Part Code		Qty
		GAE12AB-D3RNB2A	GAE12AB-D3RNB2B	
	Product Code	CC060002101	CC060002301	
1	Cabinet Assy	01431395	01431395	1
2	Cabinet Sub-assy	01431394P	01431394P	1
3	Ambient Temperature Sensor	3900012123	3900012123	1
4	Condenser Assy	01101348	01101348	1
5	Axial Flow Fan	10331004	10331004	1
6	Flow Guide Loop	10371215	10371215	1
7	Diversion Circle Cover	01251028P	01251028P	1
8	Diversion Circle	10371213	10371213	1
9	Mid Clapboard Assy	01231154	01231154	1
10	Mid-connect board	01381004	01381004	2
11	Air Inlet Door Sub-assy	01441015	01441015	1
12	Filter Sub-Assy	11121213	11121213	1
13	Door thread	02121014	02121014	1
14	Lower cover of hand lever	26231155	26231155	1
15	Hand lever	26231153	26231153	1
16	Upper cover of hand lever	26231154	26231154	1
17	Outer support sub-assy (left)	01701015	01701015	1
18	Top Cover Plate Sub-Assy	01251013	01251013	1
19	Helicoid Tongue sub-assy	02121028P	02121028P	1
20	Rear grill	01471017	01471017	1
21	Left side board of duct	02121024P	02121024P	1
22	Bearing Holder sub-assy	26151139	26151139	1
23	Cross Flow Fan	10351002	10351002	1
24	Electric Heater	3200000201	3200000201	1
25	Tube Sensor	390001921	390001921	1
26	Evaporator Assy	0100128501	0100128501	1
27	Front Panel Assy	20001475	20001475	1
28	Air Outlet Grille	22411153	22411153	1
29	Press board of filter 1	26111139	26111139	1
30	Press board of filter 2	26111140	26111140	1
31	Press board of filter 3	26111141	26111141	1
32	Front Panel	20001457	20001457	1
33	Front panel clip	02111013	02111013	2
34	LCD Cover	20121097	20121097	1
35	Membrane	63061309	63061309	1
36	Filter	11121212	11121212	2
37	Remote Control Cover	20121070	20121070	1
38	Wiring terminal	42010037	42010037	1
39	Display Board	30562029	30562029	1
40	Main board 1	30132040	30132040	1
41	Main board 2	30132043	30132072	1
42	Capacitor CBB61	33010089	33010089	1
43	Capacitor CBB61	33010026	33010026	1
44	Fan Motor	1501180203	1501180203	1
45	Motor Support Sub-Assy	01701014P	01701014P	1
46	Right side board of duct	02121023P	02121023P	1

47	Mid-Clapboard	01231079P	01231079P	1
48	Capillary Sub-assy	03001139	03001139	1
49	Outer support sub-assy (right)	01701016	01701016	1
50	Fan Motor	15011047	15011047	1
51	Compressor and fittings	00101087	00101087	1
52	Discharge Tube 1	03611611	03611611	1
53	Overload Protector	00181071	00181071	1
54	Inhalation Tube 1	03621634	03621634	1
55	Drainage Valve	07100164	07100164	1
56	Power Cord	400203632	4002056001	1
57	Chassis Sub-assy	0120102607P	0120102607P	1
58	Foam (water tray)	12411904	12411904	1
59	Thermal baffle	02121012	02121012	1
60	Electric Box Assy	2010129805	2010129807	1
61	Capacitor CBB65	33000017	33000017	1
62	Terminal Board	42011103	42011103	1
63	Transformer	43110270	43110270	1
64	Wiring terminal	42010039S	42010039S	1

Above data is subject to change without notice.

NO.	Description	Part Code	Qty
		GAE15AB-D3RNB2B	
	Product Code	CC060002501	
1	Cabinet Assy	01431395	1
2	Cabinet Sub-assy	01431394P	1
3	Ambient Temperature Sensor	3900012123	1
4	Condenser Assy	01101191	1
5	Axial Flow Fan	10331004	1
6	Flow Guide Loop	10371215	1
7	Diversion Circle Cover	01251028P	1
8	Diversion Circle	10371213	1
9	Mid Clapboard Assy	01231154	1
10	Mid-connect board	01381004	2
11	Air Inlet Door Sub-assy	01441015	1
12	Filter Sub-Assy	11121213	1
13	Door thread	02121014	1
14	Lower cover of hand lever	26231155	1
15	Hand lever	26231153	1
16	Upper cover of hand lever	26231154	1
17	Outer support sub-assy (left)	01701015	1
18	Top Cover Plate Sub-Assy	01251013	1
19	Helicoid Tongue sub-assy	02121028P	1
20	Rear grill	01471017	1
21	Left side board of duct	02121024P	1
22	Bearing Holder sub-assy	26151139	1
23	Cross Flow Fan	10351002	1
24	Electric Heater	32000002	1
25	Tube Sensor	390001921	1
26	Evaporator Assy	0100128501	1
27	Front Panel Assy	20001475	1
28	Air Outlet Grille	22411153	1
29	Press board of filter 1	26111139	1
30	Press board of filter 2	26111140	1
31	Press board of filter 3	26111141	1
32	Front Panel	20001457	1
33	Front panel clip	02111013	2
34	LCD Cover	20121097	1
35	Membrane	63061309	1
36	Filter	11121212	2
37	Remote Control Cover	20121070	1
38	Wiring terminal	42010037	1
39	Display Board	30562029	1
40	Main board 1	30132040	1
41	Main board 2	30132072	1
42	Capacitor CBB61	33010026	1
43	Capacitor CBB61	33010089	1
44	Fan Motor	1501180203	1
45	Motor Support Sub-Assy	01701014P	1
46	Right side board of duct	02121023P	1

47	Mid-Clapboard	01231079P	1
48	Capillary Sub-assy	03001341	1
49	Outer support sub-assy (right)	01701016	1
50	Fan Motor	15011047	1
51	Compressor and fittings	00101085	1
52	Discharge Tube 1	03611432	1
53	Overload Protector	00180326	1
54	Inhalation Tube 1	03621354	1
55	Drainage Valve	07100164	1
56	Power Cord	4002056001	1
57	Chassis Sub-assy	01201026P	1
58	Foam (water tray)	12411904	1
59	Thermal baffle	02121012	1
60	Electric Box Assy	2010129809	1
61	Capacitor CBB65	33010045	1
62	Terminal Board	42011103	1
63	Transformer	43110270	1
64	Wiring terminal	42010039S	1

Above data is subject to change without notice.

GAA07AB-D3RNB2A(CC060001801), GAA09AB-D3RNB2A(CC060002001), GAA12AB-D3RNB2A(CC060002201, CC060002206)
GAA12AB-D3RNB2B(CC060002401), GAA15AB-D3RNB2B(CC060002601)

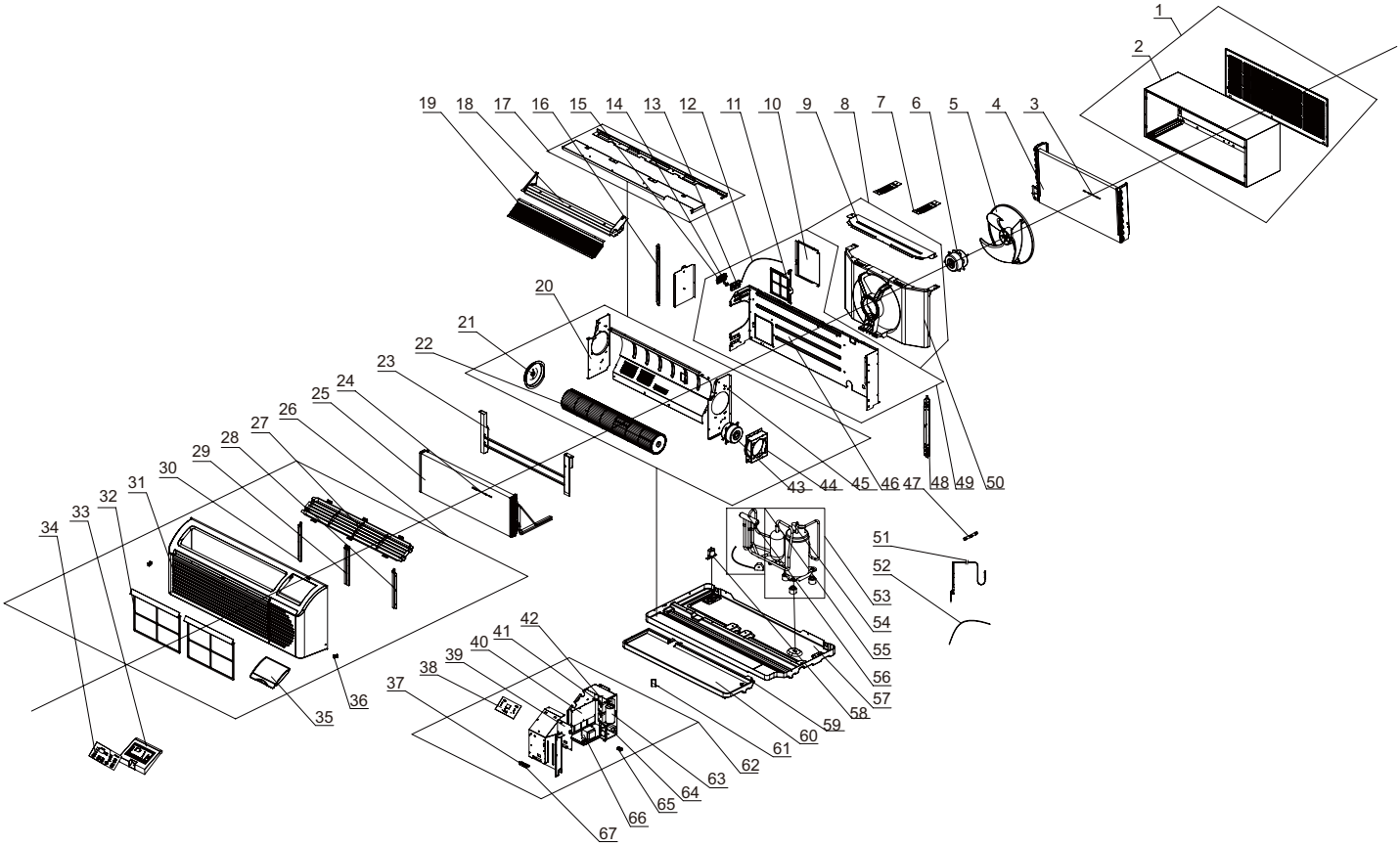

NO.	Description	Part Code		Qty
		GAA07AB-D3RNB2A	GAA09AB-D3RNB2A	
	Product Code	CC060001801	CC060002001	
1	Cabinet Assy	01431395	01431395	1
2	Cabinet Sub-assy	01431394P	01431394P	1
3	Ambient Temperature Sensor	3900012123	3900012123	1
4	Condenser Assy	01101289	01101348	1
5	Axial Flow Fan	10331004	10331004	1
6	Fan Motor	150110343	150110343	1
7	Mid-connect board	01381004	01381004	2
8	Flow Guide Loop	10371215	10371215	1
9	Diversion Circle Cover	01251028P	01251028P	1
10	Air Inlet Door Sub-assy	01441015	01441015	1
11	Filter Sub-Assy	11121213	11121213	1
12	Door thread	02121014	02121014	1
13	Lower cover of hand lever	26231155	26231155	1
14	Hand lever	26231153	26231153	1
15	Upper cover of hand lever	26231154	26231154	1
16	Outer support sub-assy (left)	01701015	01701015	1
17	Top Cover Plate Sub-Assy	01251013	01251013	1
18	Helicoid Tongue sub-assy	02121028P	02121028P	1
19	Rear grill	01471017	01471017	1
20	Left side board of duct	02121024P	02121024P	1
21	Bearing Holder sub-assy	26151139	26151139	1
22	Cross Flow Fan	10351002	10351002	1
23	Electric Heater	3200000201	3200000201	1
24	Tube Sensor	390001921	390001921	1
25	Evaporator Assy	0100106601	0100128401	1
26	Front Panel Assy	20001475	20001475	1
27	Air Outlet Grille	22411153	22411153	1
28	Press board of filter 1	26111139	26111139	1
29	Press board of filter 2	26111140	26111140	1
30	Press board of filter 3	26111141	26111141	1
31	Front Panel	20001457	20001457	1
32	Filter	11121212	11121212	2
33	LCD Cover	20121097	20121097	1
34	Membrane	63061309	63061309	1
35	Remote Control Cover	20121070	20121070	1
36	Front panel clip	2111013	02111013	2
37	Wiring terminal	42010037	42010037	1
38	Display Board	30562029	30562029	1
39	Main board 1	30132041	30132043	1
40	Main board 2	30132043	30132041	1
41	Capacitor CBB61	33010089	33010035	1
42	Capacitor CBB61	33010025	33010025	1
43	Fan Motor	1501180202	15011802	1
44	Motor Support Sub-Assy	01701014P	01701014P	1
45	Right side board of duct	02121023P	02121023P	1
46	Mid-Clapboard	01231079P	01231079P	1

47	One way Valve	07133001	07133001	1
48	Outer support sub-assy (right)	01701016	01701016	1
49	Mid Clapboard Assy	01231154	01231154	1
50	Diversion Circle	10371213	10371213	1
51	Capillary Sub-assy	03001765	03001767	1
52	Power Cord	400203632	400203632	1
53	Compressor and fittings	00101061	00101049	1
54	Overload Protector	180303	/	1
55	4-Way Valve Assy	3021222	3021221	1
56	4-way Valve	430004022	430004022	1
57	Chassis Sub-assy	0120102601P	0120102603P	1
58	Drainage Valve	7100164	7100164	1
59	Foam (water tray)	12411904	12411904	1
60	Thermal baffle	2121012	2121012	1
61	Magnet Coil	4300040042	4300040042	1
62	Electric Box Assy	2010129802	2010129804	1
63	Capacitor CBB65	33010045	33000017	1
64	Terminal Board	42011103	42011103	1
65	Radiator	49010252	49010252	1
66	Transformer	43110270	43110270	1
67	Wiring terminal	42010039S	42010039S	1

Above data is subject to change without notice.

NO.	Description	Part Code		Qty
		GAA12AB-D3RNB2A	GAA12AB-D3RNB2B	
	Product Code	CC060002201	CC060002401	
1	Cabinet Assy	01431395	01431395	1
2	Cabinet Sub-assy	01431394P	01431394P	1
3	Ambient Temperature Sensor	3900012123	3900012123	1
4	Condenser Assy	01101348	01101348	1
5	Axial Flow Fan	10331004	10331004	1
6	Fan Motor	15011047	15011047	1
7	Mid-connect board	01381004	01381004	2
8	Flow Guide Loop	10371215	10371215	1
9	Diversion Circle Cover	01251028P	01251028P	1
10	Air Inlet Door Sub-assy	01441015	01441015	1
11	Filter Sub-Assy	11121213	11121213	1
12	Door thread	02121014	02121014	1
13	Lower cover of hand lever	26231155	26231155	1
14	Hand lever	26231153	26231153	1
15	Upper cover of hand lever	26231154	26231154	1
16	Outer support sub-assy (left)	01701015	01701015	1
17	Top Cover Plate Sub-Assy	01251013	01251013	1
18	Helicoid Tongue sub-assy	02121028P	02121028P	1
19	Rear grill	01471017	01471017	1
20	Left side board of duct	02121024P	02121024P	1
21	Bearing Holder sub-assy	26151139	26151139	1
22	Cross Flow Fan	10351002	10351002	1
23	Electric Heater	3200000201	32000002	1
24	Tube Sensor	390001921	390001921	1
25	Evaporator Assy	0100128501	0100128501	1
26	Front Panel Assy	20001475	20001475	1
27	Air Outlet Grille	22411153	22411153	1
28	Press board of filter 1	26111139	26111139	1
29	Press board of filter 2	26111140	26111140	1
30	Press board of filter 3	26111141	26111141	1
31	Front Panel	20001457	20001457	1
32	Filter	11121212	11121212	2
33	LCD Cover	20121097	20121097	1
34	Membrane	63061309	63061309	1
35	Remote Control Cover	20121070	20121070	1
36	Front panel clip	02111013	02111013	2
37	Wiring terminal	42010037	42010037	1
38	Display Board	30562029	30562029	1
39	Main board 1	30132041	30132041	1
40	Main board 2	30132043	30132072	1
41	Capacitor CBB61	33010089	33010089	1
42	Capacitor CBB61	33010026	33010026	1
43	Fan Motor	1501180203	1501180203	1
44	Motor Support Sub-Assy	01701014P	01701014P	1
45	Right side board of duct	02121023P	02121023P	1
46	Mid-Clapboard	01231079P	01231079P	1

47	One way Valve	/	/	/
48	Outer support sub-assy (right)	01701016	01701016	1
49	Mid Clapboard Assy	01231154	01231154	1
50	Diversion Circle	10371213	10371213	1
51	Capillary Sub-assy	03001139	03001139	1
52	Power Cord	400203632	4002056001	1
53	Compressor and fittings	00101087	00101087	1
54	Overload Protector	00181071	00181071	1
55	4-Way Valve Assy	03021223	03021223	1
56	4-way Valve	430004032	430004032	1
57	Chassis Sub-assy	0120102607P	0120102607P	1
58	Drainage Valve	07100164	07100164	1
59	Foam (water tray)	12411904	12411904	1
60	Thermal baffle	02121012	02121012	1
61	Magnet Coil	4300040042	4300040042	1
62	Electric Box Assy	2010129806	2010129808	1
63	Capacitor CBB65	33000017	33000017	1
64	Terminal Board	42011103	42011103	1
65	Radiator	49010252	49010252	1
66	Transformer	43110270	43110270	1
67	Wiring terminal	42010039S	42010039S	1

Above data is subject to change without notice.

NO.	Description	Part Code	Qty
		GAA15AB-D3RNB2B	
	Product Code	CC060002601	
1	Cabinet Assy	01431395	1
2	Cabinet Sub-assy	01431394P	1
3	Ambient Temperature Sensor	3900012123	1
4	Condenser Assy	01101191	1
5	Axial Flow Fan	10331004	1
6	Fan Motor	15011048	1
7	Mid-connect board	01381004	2
8	Flow Guide Loop	10371215	1
9	Diversion Circle Cover	01251028P	1
10	Air Inlet Door Sub-assy	01441015	1
11	Filter Sub-Assy	11121213	1
12	Door thread	02121014	1
13	Lower cover of hand lever	26231155	1
14	Hand lever	26231153	1
15	Upper cover of hand lever	26231154	1
16	Outer support sub-assy (left)	01701015	1
17	Top Cover Plate Sub-Assy	01251013	1
18	Helicoid Tongue sub-assy	02121028P	1
19	Rear grill	01471017	1
20	Left side board of duct	02121024P	1
21	Bearing Holder sub-assy	26151139	1
22	Cross Flow Fan	10351002	1
23	Electric Heater	32000002	1
24	Tube Sensor	390001921	1
25	Evaporator Assy	0100128501	1
26	Front Panel Assy	20001475	1
27	Air Outlet Grille	22411153	1
28	Press board of filter 1	26111139	1
29	Press board of filter 2	26111140	1
30	Press board of filter 3	26111141	1
31	Front Panel	20001457	1
32	Filter	11121212	2
33	LCD Cover	20121097	1
34	Membrane	63061309	1
35	Remote Control Cover	20121070	1
36	Front panel clip	02111013	2
37	Wiring terminal	42010037	1
38	Display Board	30562029	1
39	Main board 1	30132041	1
40	Main board 2	30132072	1
41	Capacitor CBB61	33010089	1
42	Capacitor CBB61	33010026	1
43	Fan Motor	1501180203	1
44	Motor Support Sub-Assy	01701014P	1
45	Right side board of duct	02121023P	1
46	Mid-Clapboard	01231079P	1

47	One way Valve	07133001	1
48	Outer support sub-assy (right)	01701016	1
49	Mid Clapboard Assy	01231154	1
50	Diversion Circle	10371213	1
51	Capillary Sub-assy	03001434	1
52	Power Cord	4002056001	1
53	Compressor and fittings	00101085	1
54	Overload Protector	00180326	1
55	4-Way Valve Assy	03021187	1
56	4-way Valve	430004032	1
57	Chassis Sub-assy	01201026P	1
58	Drainage Valve	07100164	1
59	Foam (water tray)	12411904	1
60	Thermal baffle	02121012	1
61	Magnet Coil	4300040042	1
62	Electric Box Assy	20101298	1
63	Capacitor CBB65	33000045	1
64	Terminal Board	42011103	1
65	Radiator	49010252	1
66	Transformer	43110270	1
67	Wiring terminal	42010039S	1

Above data is subject to change without notice.

NO.	Description	Part Code	Qty
		GAA12AB-D3RNB2A	
	Product Code	CC060002206	
1	Cabinet Assy	01431395	1
2	Cabinet Sub-assy	01431394P	1
3	Ambient Temperature Sensor	3900012123	1
4	Condenser Assy	01101099	1
5	Axial Flow Fan	10331004	1
6	Fan Motor	15011047	1
7	Mid-connect board	01381004P	2
8	Flow Guide Loop	10371215	1
9	Diversion Circle Cover	01251028P	1
10	Air Inlet Door Sub-assy	01441015	1
11	Filter Sub-Assy	11121213	1
12	Door thread	02121014	1
13	Lower cover of hand lever	26231155	1
14	Hand lever	26231153	1
15	Upper cover of hand lever	26231154	1
16	Outer support sub-assy (left)	01701015	1
17	Top Cover Plate Sub-Assy	01251013P	1
18	Helicoid Tongue sub-assy	02121028P	1
19	Rear grill	01471017	1
20	Left side board of duct	02121024P	1
21	Bearing Holder sub-assy	26151139	1
22	Cross Flow Fan	10351002	1
23	Electric Heater	3200000201	1
24	Tube Sensor	390001921	1
25	Evaporator Assy	0100128501	1
26	Front Panel Assy	20001475	1
27	Air Outlet Grille	2241102301	1
28	Press board of filter 1	2611113901	1
29	Press board of filter 2	2611114001	1
30	Press board of filter 3	2611114101	1
31	Front Panel	2000145702	1
32	Filter	1112121201	2
33	LCD Cover	20121097	1
34	Membrane	63061309	1
35	Remote Control Cover	2012107001	1
36	Front panel clip	02111013	2
37	Wiring terminal	42010037	1
38	Display Board	30562029	1
39	Main board 1	30132041	1
40	Main board 2	30132043	1
41	Capacitor CBB61	33010089	1
42	Capacitor CBB61	33010026	1
43	Fan Motor	1501180203	1
44	Motor Support Sub-Assy	01701014P	1
45	Right side board of duct	02121023P	1
46	Mid-Clapboard	01231079P	1

47	One way Valve	/	1
48	Outer support sub-assy (right)	01701016	1
49	Mid Clapboard Assy	0123115401	1
50	Diversion Circle	10371213	1
51	Capillary Sub-assy	03001139	1
52	Power Cord	400203632	1
53	Compressor and fittings	00101087	1
54	Overload Protector	00181071	1
55	4-Way Valve Assy	03021223	1
56	4-way Valve	430004032	1
57	Chassis Sub-assy	0120102607P	1
58	Drainage Valve	07100164	1
59	Foam (water tray)	12411904	1
60	Thermal baffle	02121012	1
61	Magnet Coil	4300040042	1
62	Electric Box Assy	2010129806	1
63	Capacitor CBB65	33000017	1
64	Terminal Board	42011103	1
65	Radiator	49010252	1
66	Transformer	43110270	1
67	Wiring terminal	42010039S	1

Above data is subject to change without notice.

GAE07AB-D3RNB2A(CC060001702), GAE09AB-D3RNB2A(CC060001902), GAE12AB-D3RNB2A(CC060002102)
GAE12AB-D3RNB2B(CC060002302), GAE15AB-D3RNB2B(CC060002502)

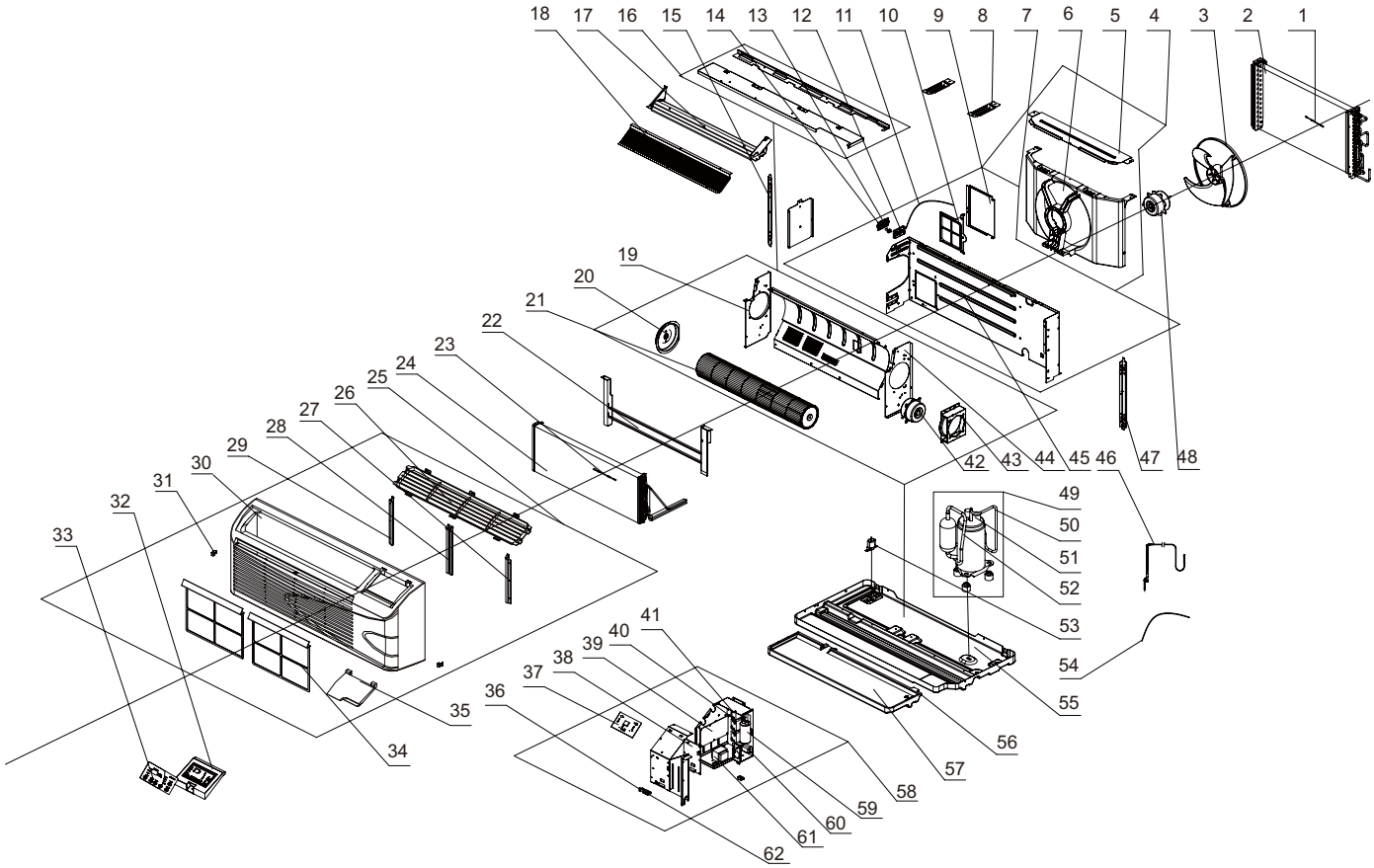

NO.	Description	Part Code		Qty
		GAE07AB-D3RNB2A	GAE09AB-D3RNB2A	
	Product Code	CC060001702	CC060001902	
1	Ambient Temperature Sensor	3900012123	3900012123	1
2	Condenser Assy	01101289	01101348	1
3	Axial Flow Fan	10331004	10331004	1
4	Flow Guide Loop	10371215	10371215	1
5	Diversion Circle Cover	01251028P	01251028P	1
6	Diversion Circle	10371213	10371213	1
7	Mid Clapboard Assy	01231154	01231154	1
8	Mid Connect Board	01381004	01381004	2
9	Air Inlet Door Sub-assy	01441015	01441015	1
10	Filter Sub-Assy	11121213	11121213	1
11	Door Thread	02121014	02121014	1
12	Lower Cover of Hand Lever	26231155	26231155	1
13	Hand Lever	26231153	26231153	1
14	Upper Cover of Hand Lever	26231154	26231154	1
15	Outer Support Sub-assy(Left)	01701015	01701015	1
16	Top Cover Plate Sub-Assy	01251013	01251013	1
17	Helicoid Tongue sub-assy	02121028P	02121028P	1
18	Rear Grill	01471017	01471017	1
19	Left Side Board of Duct	02121024P	02121024P	1
20	Bearing Holder Sub-assy	26151139	26151139	1
21	Cross Flow Fan	10351002	10351002	1
22	Electric Heater	3200000201	3200000201	1
23	Tube Sensor	390000596	390000596	1
24	Evaporator Assy	0100106601	0100106601	1
25	Front Panel Assy	2000139001	2000139001	1
26	Air Outlet Grille	22411023	22411023	1
27	Press Board of Filter 1	26111139	26111139	1
28	Press Board of Filter 2	26111140	26111140	1
29	Press Board of Filter 3	26111141	26111141	1
30	Front Panel	20001386	20001386	1
31	Front Panel Clip	02111013	02111013	2
32	LCD Cover	20121097	20121097	1
33	Membrane	63061309	63061309	1
34	Filter	11121212	11121212	2
35	Remote Control Cover	20161238	20161238	1
36	Wiring terminal	42010037	42010037	1
37	Display Board	30562029	30562029	1
38	Main Board 1	30132040	30132040	1
39	Main Board 2	30132043	30132043	1
40	Capacitor CBB61	33010089	33010089	1
41	Capacitor CBB61	33010025	33010025	1
42	Fan Motor	1501180202	15011802	1
43	Motor Support Sub-Assy	01701014P	01701014P	1
44	Right Side Board of Duct	02121023P	02121023P	1
45	Mid Clapboard	01231079P	01231079P	1
46	Capillary Sub-assy	03001764	03001766	1

47	Outer Support Sub-assy(Right)	01701016	01701016	1
48	Fan Motor	150110343	150110343	1
49	Compressor and Fittings	00101061	00101049	1
50	Discharge Tube 1	03611753	03611515	1
51	Compressor Overload Proctector(External)	00180303	/	1
52	Inhalation Tube 1	03621923	03621829	1
53	Drainage Valve	07100164	07100164	1
54	Power Cord	400203632	400203632	1
55	Chassis Sub-assy	0120102601P	0120102603P	1
56	Foam (Water Tray)	12411904	12411904	1
57	Thermal Baffle	02121012	02121012	1
58	Electric Box Assy	2010129801	2010129803	1
59	Capacitor CBB65	33010045	33000017	1
60	Terminal Board	42011103	42011103	1
61	Transformer	43110270	43110270	1
62	Wiring terminal	42010039S	42010039S	1

Above data is subject to change without notice.

NO.	Description	Part Code		Qty
		GAE12AB-D3RNB2A	GAE12AB-D3RNB2B	
	Product Code	CC060002102	CC060002302	
1	Ambient Temperature Sensor	3900012123	3900012123	1
2	Condenser Assy	01101348	01101348	1
3	Axial Flow Fan	10331004	10331004	1
4	Flow Guide Loop	10371215	10371215	1
5	Diversion Circle Cover	01251028P	01251028P	1
6	Diversion Circle	10371213	10371213	1
7	Mid Clapboard Assy	01231154	01231154	1
8	Mid Connect Board	01381004	01381004	2
9	Air Inlet Door Sub-assy	01441015	01441015	1
10	Filter Sub-Assy	11121213	11121213	1
11	Door Thread	02121014	02121014	1
12	Lower Cover of Hand Lever	26231155	26231155	1
13	Hand Lever	26231153	26231153	1
14	Upper Cover of Hand Lever	26231154	26231154	1
15	Outer Support Sub-assy(Left)	01701015	01701015	1
16	Top Cover Plate Sub-Assy	01251013	01251013	1
17	Helicoid Tongue sub-assy	02121028P	02121028P	1
18	Rear Grill	01471017	01471017	1
19	Left Side Board of Duct	02121024P	02121024P	1
20	Bearing Holder Sub-assy	26151139	26151139	1
21	Cross Flow Fan	10351002	10351002	1
22	Electric Heater	3200000201	32000002	1
23	Tube Sensor	390000596	390000596	1
24	Evaporator Assy	0100128501	0100128501	1
25	Front Panel Assy	2000139001	2000139001	1
26	Air Outlet Grille	22411023	22411023	1
27	Press Board of Filter 1	26111139	26111139	1
28	Press Board of Filter 2	26111140	26111140	1
29	Press Board of Filter 3	26111141	26111141	1
30	Front Panel	20001386	20001386	1
31	Front Panel Clip	02111013	02111013	2
32	LCD Cover	20121097	20121097	1
33	Membrane	63061309	63061309	1
34	Filter	11121212	11121212	2
35	Remote Control Cover	20161238	20161238	1
36	Wiring terminal	42010037	42010037	1
37	Display Board	30562029	30562029	1
38	Main Board 1	30132040	30132040	1
39	Main Board 2	30132043	30132072	1
40	Capacitor CBB61	33010089	33010089	1
41	Capacitor CBB61	33010026	33010026	1
42	Fan Motor	1501180203	1501180203	1
43	Motor Support Sub-Assy	01701014P	01701014P	1
44	Right Side Board of Duct	02121023P	02121023P	1
45	Mid Clapboard	01231079P	01231079P	1
46	Capillary Sub-assy	03001139	03001139	1

47	Outer Support Sub-assy(Right)	01701016	01701016	1
48	Fan Motor	15011047	15011047	1
49	Compressor and Fittings	00101087	00101087	1
50	Discharge Tube 1	03611611	03611611	1
51	Compressor Overload Proctector(External)	00181071	00181071	1
52	Inhalation Tube 1	03621634	03621634	1
53	Drainage Valve	07100164	07100164	1
54	Power Cord	400203632	4002056001	1
55	Chassis Sub-assy	0120102607P	0120102607P	1
56	Foam (Water Tray)	12411904	12411904	1
57	Thermal Baffle	02121012	02121012	1
58	Electric Box Assy	2010129805	2010129807	1
59	Capacitor CBB65	33000018	33000018	1
60	Terminal Board	42011103	42011103	1
61	Transformer	43110270	43110270	1
62	Wiring terminal	42010039S	42010039S	1

Above data is subject to change without notice.

NO.	Description	Part Code	Qty
		GAE15AB-D3RNB2B	
	Product Code	CC060002502	
1	Ambient Temperature Sensor	3900012123	1
2	Condenser Assy	01101191	1
3	Axial Flow Fan	10331004	1
4	Flow Guide Loop	10371215	1
5	Diversion Circle Cover	01251028P	1
6	Diversion Circle	10371213	1
7	Mid Clapboard Assy	01231154	1
8	Mid Connect Board	01381004	2
9	Air Inlet Door Sub-assy	01441015	1
10	Filter Sub-Assy	11121213	1
11	Door Thread	02121014	1
12	Lower Cover of Hand Lever	26231155	1
13	Hand Lever	26231153	1
14	Upper Cover of Hand Lever	26231154	1
15	Outer Support Sub-assy(Left)	01701015	1
16	Top Cover Plate Sub-Assy	01251013	1
17	Helicoid Tongue sub-assy	02121028P	1
18	Rear Grill	01471017	1
19	Left Side Board of Duct	02121024P	1
20	Bearing Holder Sub-assy	26151139	1
21	Cross Flow Fan	10351002	1
22	Electric Heater	32000002	1
23	Tube Sensor	390000596	1
24	Evaporator Assy	0100128501	1
25	Front Panel Assy	2000139001	1
26	Air Outlet Grille	22411023	1
27	Press Board of Filter 1	26111139	1
28	Press Board of Filter 2	26111140	1
29	Press Board of Filter 3	26111141	1
30	Front Panel	20001386	1
31	Front Panel Clip	02111013	2
32	LCD Cover	20121097	1
33	Membrane	63061309	1
34	Filter	11121212	2
35	Remote Control Cover	20161238	1
36	Wiring terminal	42010037	1
37	Display Board	30562029	1
38	Main Board 1	30132040	1
39	Main Board 2	30132072	1
40	Capacitor CBB61	33010089	1
41	Capacitor CBB61	33010026	1
42	Fan Motor	1501180203	1
43	Motor Support Sub-Assy	01701014P	1
44	Right Side Board of Duct	02121023P	1
45	Mid Clapboard	01231079P	1
46	Capillary Sub-assy	03001341	1

47	Outer Support Sub-assy(Right)	01701016	1
48	Fan Motor	15011047	1
49	Compressor and Fittings	00101085	1
50	Discharge Tube 1	03611432	1
51	Compressor Overload Proctector(External)	00180326	1
52	Inhalation Tube 1	03621354	1
53	Drainage Valve	07100164	1
54	Power Cord	4002056001	1
55	Chassis Sub-assy	01201026P	1
56	Foam (Water Tray)	12411904	1
57	Thermal Baffle	02121012	1
58	Electric Box Assy	2010129809	1
59	Capacitor CBB65	33000045	1
60	Terminal Board	42011103	1
61	Transformer	43110270	1
62	Wiring terminal	42010039S	1

Above data is subject to change without notice.

GAA07AB-D3RNB2A(CC060001802), GAA09AB-D3RNB2A(CC060002002), GAA12AB-D3RNB2A(CC060002202)
GAA12AB-D3RNB2B(CC060002402), GAA15AB-D3RNB2B(CC060002602), GAA09AB-D3RNA1A(CC060027600)
GAA15AB-D3RNA1B(CC060027700)

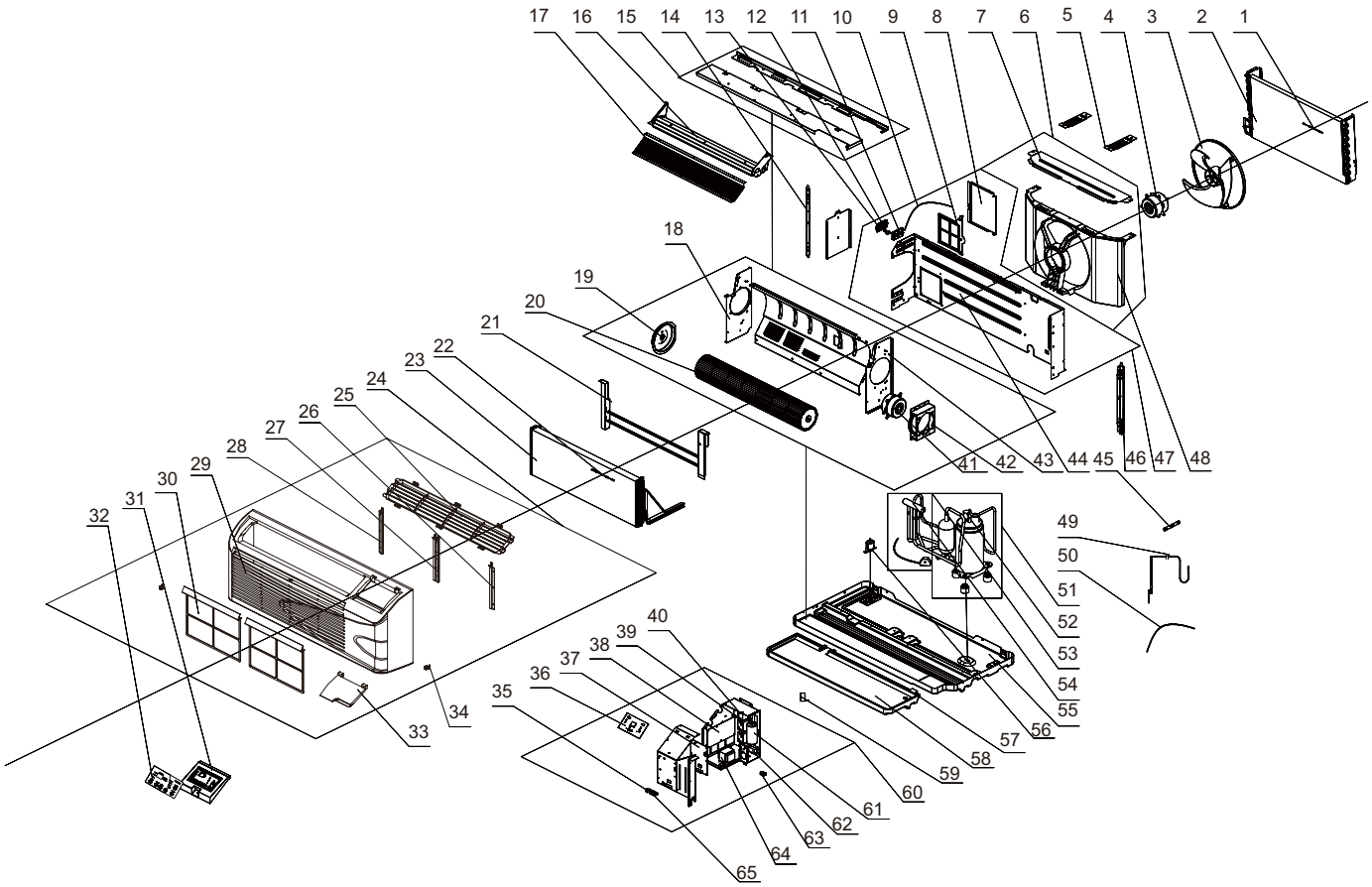

NO.	Description	Part Code		Qty
		GAA12AB-D3RNB2A	GAA12AB-D3RNB2B	
	Product Code	CC060002201	CC060002401	
1	Ambient Temperature Sensor	3900012123	3900012123	1
2	Condenser Assy	01101097	01101348	1
3	Axial Flow Fan	10331004	10331004	1
4	Fan Motor	150110343	150110343	1
5	Mid Connect Board	01381004	01381004	2
6	Flow Guide Loop	10371215	10371215	1
7	Diversion Circle Cover	01251028P	01251028P	1
8	Air Inlet Door Sub-assy	01441015	01441015	
9	Filter Sub-Assy	11121213	11121213	1
10	Door Thread	02121014	02121014	1
11	Lower Cover of Hand Lever	26231155	26231155	1
12	Hand Lever	26231153	26231153	1
13	Upper Cover of Hand Lever	26231154	26231154	1
14	Outer Support Sub-assy(Left)	01701015	01701015	1
15	Top Cover Plate Sub-Assy	01251013	01251013	1
16	Helicoid Tongue sub-assy	02121028P	02121028P	1
17	Rear Grill	01471017	01471017	1
18	Left Side Board of Duct	02121024P	02121024P	1
19	Bearing Holder Sub-assy	26151139	26151139	1
20	Cross Flow Fan	10351002	10351002	1
21	Electric Heater	3200000201	3200000201	1
22	Tube Sensor	390000596	390000596	1
23	Evaporator Assy	0100106601	0100128401	1
24	Front Panel Assy	2000139001	2000139001	1
25	Air Outlet Grille	22411153	22411153	1
26	Press Board of Filter 1	26111139	26111139	1
27	Press Board of Filter 2	26111140	26111140	1
28	Press Board of Filter 3	26111141	26111141	1
29	Front Panel	20001386	20001386	1
30	Filter	11121212	11121212	2
31	LCD Cover	20121097	20121097	1
32	Membrane	63061309	63061309	1
33	Remote Control Cover	20161238	20161238	1
34	Front Panel Clip	02111013	02111013	2
35	Wiring terminal	42010037	42010037	1
36	Display Board	30562029	30562029	1
37	Main Board 1	30132041	30132041	1
38	Main Board 2	30132043	30132043	1
39	Capacitor CBB61	33000064	33000064	1
40	Capacitor CBB61	33010025	33010089	1
41	Fan Motor	15011802	15011802	1
42	Motor Support Sub-Assy	01701014P	01701014P	1
43	Right Side Board of Duct	02121023P	02121023P	1
44	Mid Clapboard	01231079P	01231079P	1
45	One Way Valve	07133001	07133001	1
46	Outer Support Sub-assy(Right)	01701016	01701016	1

47	Mid Clapboard Assy	01231154	01231154	1
48	Diversion Circle	10371213	10371213	1
49	Capillary Sub-assy	03001765	03001767	1
50	Power Cord	400203632	400203632	1
51	Compressor and Fittings	00101061	00101049	1
52	Compressor Overload Proctector(External)	00180303	/	1
53	4-Way Valve Assy	03021222	03021221	1
54	4-Way Valve	430004022	430004022	1
55	Chassis Sub-assy	0120102601P	0120102603P	1
56	Drainage Valve	07100164	07100164	1
57	Foam (Water Tray)	12411904	12411904	1
58	Thermal Baffle	02121012	02121012	1
59	Magnet Coil	4300040022	4300040022	1
60	Electric Box Assy	2010129802	2010129804	1
61	Capacitor CBB65	33010045	33000017	1
62	Terminal Board	42011103	42011103	1
63	Radiator	49010252	49010252	1
64	Transformer	43110270	43110270	1
65	Wiring terminal	42010039S	42010039S	1

Above data is subject to change without notice.

NO.	Description	Part Code		Qty
		GAA12AB-D3RNB2A	GAA12AB-D3RNB2B	
	Product Code	CC060002202	CC060002402	
1	Ambient Temperature Sensor	3900012123	3900012123	1
2	Condenser Assy	01101097	01101348	1
3	Axial Flow Fan	10331004	10331004	1
4	Fan Motor	15011047	15011047	1
5	Mid Connect Board	01381004	01381004	2
6	Flow Guide Loop	10371215	10371215	1
7	Diversion Circle Cover	01251028P	01251028P	1
8	Air Inlet Door Sub-assy	01441015	01441015	
9	Filter Sub-Assy	11121213	11121213	1
10	Door Thread	02121014	02121014	1
11	Lower Cover of Hand Lever	26231155	26231155	1
12	Hand Lever	26231153	26231153	1
13	Upper Cover of Hand Lever	26231154	26231154	1
14	Outer Support Sub-assy(Left)	01701015	01701015	1
15	Top Cover Plate Sub-Assy	01251013	01251013	1
16	Helicoid Tongue sub-assy	02121028P	02121028P	1
17	Rear Grill	01471017	01471017	1
18	Left Side Board of Duct	02121024P	02121024P	1
19	Bearing Holder Sub-assy	26151139	26151139	1
20	Cross Flow Fan	10351002	10351002	1
21	Electric Heater	3200000201	32000002	1
22	Tube Sensor	390000596	390000596	1
23	Evaporator Assy	0100128501	0100128501	1
24	Front Panel Assy	2000139001	2000139001	1
25	Air Outlet Grille	22411153	22411153	1
26	Press Board of Filter 1	26111139	26111139	1
27	Press Board of Filter 2	26111140	26111140	1
28	Press Board of Filter 3	26111141	26111141	1
29	Front Panel	20001386	20001386	1
30	Filter	11121212	11121212	2
31	LCD Cover	20121097	20121097	1
32	Membrane	63061309	63061309	1
33	Remote Control Cover	20161238	20161238	1
34	Front Panel Clip	02111013	02111013	2
35	Wiring terminal	42010037	42010037	1
36	Display Board	30562029	30562029	1
37	Main Board 1	30132041	30132072	1
38	Main Board 2	30132043	30132043	1
39	Capacitor CBB61	33010089	33010089	1
40	Capacitor CBB61	33010026	33010026	1
41	Fan Motor	1501180203	1501180203	1
42	Motor Support Sub-Assy	01701014P	01701014P	1
43	Right Side Board of Duct	02121023P	02121023P	1
44	Mid Clapboard	01231079P	01231079P	1
45	One Way Valve	/	/	/
46	Outer Support Sub-assy(Right)	01701016	01701016	1

47	Mid Clapboard Assy	01231154	01231154	1
48	Diversion Circle	10371213	10371213	1
49	Capillary Sub-assy	03001139	03001139	1
50	Power Cord	400203632	4002056001	1
51	Compressor and Fittings	00101087	00101087	1
52	Compressor Overload Proctector(External)	00181071	00181071	1
53	4-Way Valve Assy	03021223	03021223	1
54	4-Way Valve	430004032	430004032	1
55	Chassis Sub-assy	0120102607P	0120102607P	1
56	Drainage Valve	07100164	07100164	1
57	Foam (Water Tray)	12411904	12411904	1
58	Thermal Baffle	02121012	02121012	1
59	Magnet Coil	4300040022	4300040022	1
60	Electric Box Assy	2010129806	2010129808	1
61	Capacitor CBB65	33000018	33000018	1
62	Terminal Board	42011103	42011103	1
63	Radiator	49010252	49010252	1
64	Transformer	43110270	43110270	1
65	Wiring terminal	42010039S	42010039S	1

Above data is subject to change without notice.

NO.	Description	Part Code	Qty
		GAA15AB-D3RNB2B	
	Product Code	CC060002602	
1	Ambient Temperature Sensor	3900012123	1
2	Condenser Assy	01101191	1
3	Axial Flow Fan	10331004	1
4	Fan Motor	15011048	1
5	Mid Connect Board	01381004	2
6	Flow Guide Loop	10371215	1
7	Diversion Circle Cover	01251028P	1
8	Air Inlet Door Sub-assy	01441015	
9	Filter Sub-Assy	11121213	1
10	Door Thread	02121014	1
11	Lower Cover of Hand Lever	26231155	1
12	Hand Lever	26231153	1
13	Upper Cover of Hand Lever	26231154	1
14	Outer Support Sub-assy(Left)	01701015	1
15	Top Cover Plate Sub-Assy	01251013	1
16	Helicoid Tongue sub-assy	02121028P	1
17	Rear Grill	01471017	1
18	Left Side Board of Duct	02121024P	1
19	Bearing Holder Sub-assy	26151139	1
20	Cross Flow Fan	10351002	1
21	Electric Heater	32000002	1
22	Tube Sensor	390002073	1
23	Evaporator Assy	0100128501	1
24	Front Panel Assy	2000139001	1
25	Air Outlet Grille	22411153	1
26	Press Board of Filter 1	26111139	1
27	Press Board of Filter 2	26111140	1
28	Press Board of Filter 3	26111141	1
29	Front Panel	20001386	1
30	Filter	11121212	2
31	LCD Cover	20121097	1
32	Membrane	63061309	1
33	Remote Control Cover	20161238	1
34	Front Panel Clip	02111013	2
35	Wiring terminal	42010037	1
36	Display Board	30562029	1
37	Main Board 1	30132041	1
38	Main Board 2	30132072	1
39	Capacitor CBB61	33010089	1
40	Capacitor CBB61	33010026	1
41	Fan Motor	1501180203	1
42	Motor Support Sub-Assy	01701014P	1
43	Right Side Board of Duct	02121023P	1
44	Mid Clapboard	01231079P	1
45	One Way Valve	07133001	1
46	Outer Support Sub-assy(Right)	01701016	1

47	Mid Clapboard Assy	01231154	1
48	Diversion Circle	10371213	1
49	Capillary Sub-assy	03001434	1
50	Power Cord	4002056001	1
51	Compressor and Fittings	00101085	1
52	Compressor Overload Proctector(External)	00180326	1
53	4-Way Valve Assy	03021187	1
54	4-Way Valve	430004032	1
55	Chassis Sub-assy	01201026P	1
56	Drainage Valve	07100164	1
57	Foam (Water Tray)	12411904	1
58	Thermal Baffle	02121012	1
59	Magnet Coil	4300040022	1
60	Electric Box Assy	20101298	1
61	Capacitor CBB65	33000045	1
62	Terminal Board	42011103	1
63	Radiator	49010252	1
64	Transformer	43110270	1
65	Wiring terminal	42010039S	1

Above data is subject to change without notice.

NO.	Description	Part Code	Qty
		GAA09AB-D3RNA1A	
	Product Code	CC060027600	
1	Ambient Temperature Sensor	3900012123	1
2	Condenser Assy	0110136301	1
3	Axial Flow Fan	10331004	1
4	Fan Motor	1501180303	1
5	Mid Connect Board	01381004	2
6	Flow Guide Loop	10371215	1
7	Diversion Circle Cover	01251028P	1
8	Air Inlet Door Sub-assy	01441015	
9	Filter Sub-Assy	11121213	1
10	Door Thread	02121014	1
11	Lower Cover of Hand Lever	26231155	1
12	Hand Lever	26231153	1
13	Upper Cover of Hand Lever	26231154	1
14	Outer Support Sub-assy(Left)	01701038	1
15	Top Cover Plate Sub-Assy	01251013	1
16	Helicoid Tongue sub-assy	02121028P	1
17	Rear Grill	01471017	1
18	Left Side Board of Duct	02121024P	1
19	Bearing Holder Sub-assy	26151139	1
20	Cross Flow Fan	10351002	1
21	Electric Heater	3200000201	1
22	Tube Sensor	390002073	1
23	Evaporator Assy	0100128401	1
24	Front Panel Assy	2000139002	1
25	Air Outlet Grille	22411023	1
26	Press Board of Filter 1	26111139	1
27	Press Board of Filter 2	26111140	1
28	Press Board of Filter 3	26111141	1
29	Front Panel	20001386	1
30	Filter	11121212	2
31	LCD Cover	20121097	1
32	Membrane	63061309	1
33	Remote Control Cover	20161238	1
34	Front Panel Clip	02111013	2
35	Wiring terminal	42010037	1
36	Display Board	30562029	1
37	Main Board 1	30132041	1
38	Main Board 2	30132043	1
39	Capacitor CBB61	3301074701	1
40	Capacitor CBB61	3301074702	1
41	Fan Motor	15011802	1
42	Motor Support Sub-Assy	01701014P	1
43	Right Side Board of Duct	02121023P	1
44	Mid Clapboard	01231079P	1
45	One Way Valve	/	/
46	Outer Support Sub-assy(Right)	01701039	1

47	Mid Clapboard Assy	01231154	1
48	Diversion Circle	10371213	1
49	Capillary Sub-assy	03001543	1
50	Power Cord	400203632	1
51	Compressor and Fittings	00101323	1
52	Compressor Overload Proctector(External)	00181077	1
53	4-Way Valve Assy	03021237	1
54	4-Way Valve	430004022	1
55	Chassis Sub-assy	0120102607P	1
56	Drainage Valve	07101001	1
57	Foam (Water Tray)	12411904	1
58	Thermal Baffle	02121012	1
59	Magnet Coil	4300040022	1
60	Electric Box Assy	2010129817	1
61	Capacitor CBB65	33000081	1
62	Terminal Board	42011103	1
63	Radiator	49010252	1
64	Transformer	43110270	1
65	Wiring terminal	42010039S	1

Above data is subject to change without notice.

NO.	Description	Part Code	Qty
		GAA15AB-D3RNA1B	
	Product Code	CC060027700	
1	Ambient Temperature Sensor	3900012123	1
2	Condenser Assy	01101191	1
3	Axial Flow Fan	10331004	1
4	Fan Motor	1501180310	1
5	Mid Connect Board	01381004	2
6	Flow Guide Loop	10371215	1
7	Diversion Circle Cover	01251028P	1
8	Air Inlet Door Sub-assy	01441015	1
9	Filter Sub-Assy	11121213	1
10	Door Thread	02121014	1
11	Lower Cover of Hand Lever	26231155	1
12	Hand Lever	26231153	1
13	Upper Cover of Hand Lever	26231154	1
14	Outer Support Sub-assy(Left)	01701038	1
15	Top Cover Plate Sub-Assy	01251013	1
16	Helicoid Tongue sub-assy	02121028P	1
17	Rear Grill	01471017	1
18	Left Side Board of Duct	02121024P	1
19	Bearing Holder Sub-assy	26151139	1
20	Cross Flow Fan	10351002	1
21	Electric Heater	32000002	1
22	Tube Sensor	390002073	1
23	Evaporator Assy	0100128501	1
24	Front Panel Assy	2000139002	1
25	Air Outlet Grille	22411023	1
26	Press Board of Filter 1	26111139	1
27	Press Board of Filter 2	26111140	1
28	Press Board of Filter 3	26111141	1
29	Front Panel	20001386	1
30	Filter	11121212	2
31	LCD Cover	20121097	1
32	Membrane	63061309	1
33	Remote Control Cover	20161238	1
34	Front Panel Clip	02111013	2
35	Wiring terminal	42010037	1
36	Display Board	30562029	1
37	Main Board 1	30132041	1
38	Main Board 2	30132072	1
39	Capacitor CBB61	33010089	1
40	Capacitor CBB61	33010026	1
41	Fan Motor	1501180203	1
42	Motor Support Sub-Assy	01701014P	1
43	Right Side Board of Duct	02121023P	1
44	Mid Clapboard	01231079P	1
45	One Way Valve	07133001	1
46	Outer Support Sub-assy(Right)	01701039	1

47	Mid Clapboard Assy	01231154	1
48	Diversion Circle	10371213	1
49	Capillary Sub-assy	03001844	1
50	Power Cord	4002056001	1
51	Compressor and Fittings	00101233	1
52	Compressor Overload Proctector(External)	/	/
53	4-Way Valve Assy	03021021	1
54	4-Way Valve	430004032	1
55	Chassis Sub-assy	0120102606P	1
56	Drainage Valve	07101001	1
57	Foam (Water Tray)	12411904	1
58	Thermal Baffle	02121012	1
59	Magnet Coil	4300040022	1
60	Electric Box Assy	2010129818	1
61	Capacitor CBB65	3300008101	1
62	Terminal Board	42011103	1
63	Radiator	49010252	1
64	Transformer	43110270	1
65	Wiring terminal	42010039S	1

Above data is subject to change without notice.

11. Removal Procedure

Models:
GAA07AB-D3RNB2A(CC060001800, CC060001803, CC060001805), GAA09AB-D3RNB2A(CC060002000, CC060002003, CC060002005, CC060002007, CC060002008), GAA15AB-D3RNB2A(CC060021500, CC060021501), GAA12AB-D3RNB2A(CC060002200, CC060002203, CC060002205), GAA12AB-D3RNB2B(CC060002400, CC060002403, CC060002405), GAA15AB-D3RNB2B(CC060002600, CC060002603, CC060002605), GAE07AB-D3RNB2A(CC060001700, CC060001703, CC060001705), GAE09AB-D3RNB2A(CC060001900, CC060001903, CC060001905), GAE12AB-D3RNB2A(CC060002100, CC060002103, CC060002105), GAE15AB-D3RNB2A(CC060021400, CC060021401) GAE12AB-D3RNB2B(CC060002300, CC060002303, CC060002305), GAE15AB-D3RNB2B(CC060002500, CC060002503, CC060002505) GAE07AB-D3RNB3A(CC060024000), GAA07AB-D3RNB3A(CC060024100), GAA15AB-D3RNB3B(CC060024400)

⚠ Caution: pull out the power,discharge the refrigerant completely before removal.

Note: Take heat pump+electric heating unit as example for the disassemly; cooling only+electric heating is a little different.

Steps	Procedure	
1.Remove panel		
a	Hold the panel and pat both sides of panel to separate the panels and then remove the front panel.	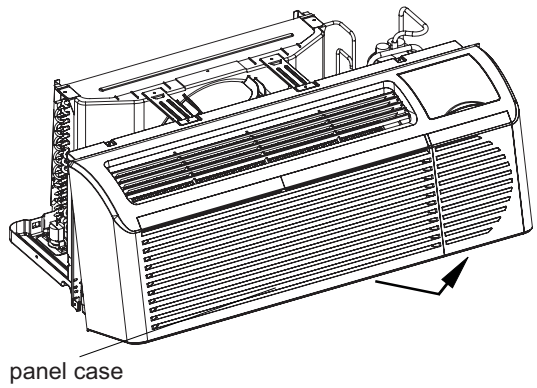 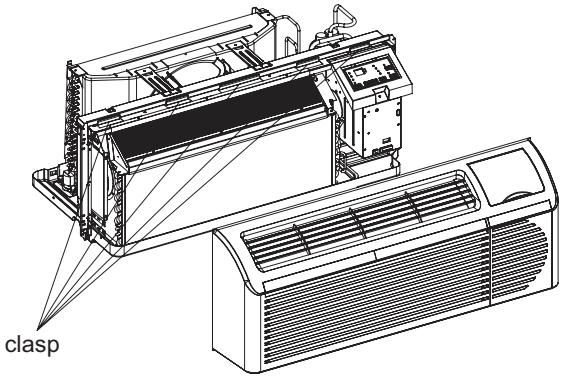
b	Hold the front part of filter by hand, lift up the filter and then remove the filter.	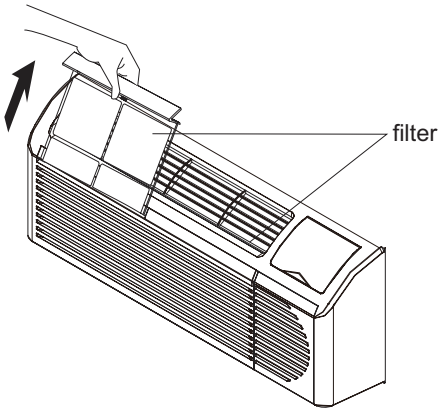

Steps	Procedure	
2.Remove middle connection board		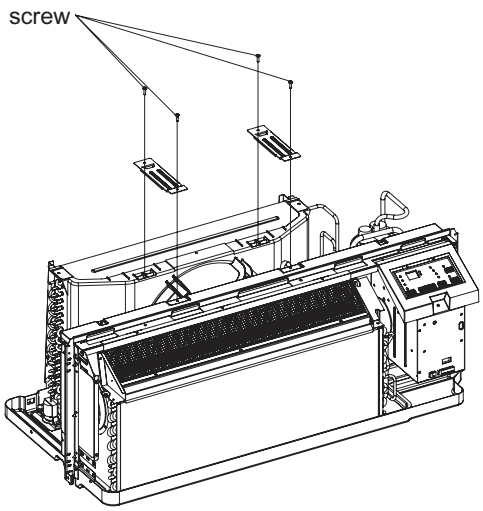
	Press the 2 clasps of filter to make it separated from the groove and then pull the filter outwards to remove it.	
3.Remove left and right support sub-assy		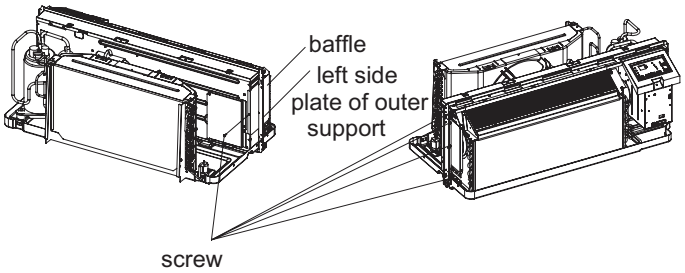
a	Remove the 4 screws fixing the left of the support and the screw fixing the baffle; remove the left support and baffle.	
b	Remove the 3 screws fixing the right side of the support sub-assy and then remove the right support.	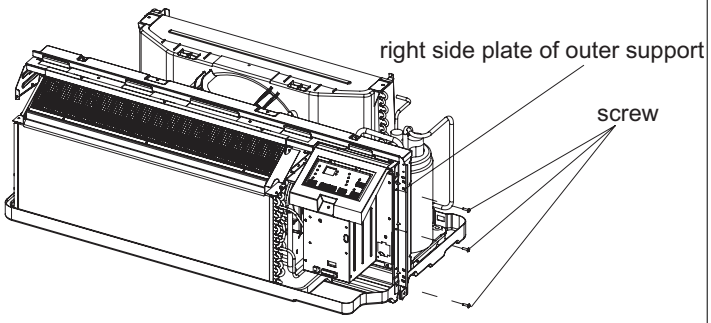

Steps	Procedure
4.Remove protective grille	
Remove the 6 screws fixing the protective grille and then remove the protective grille.	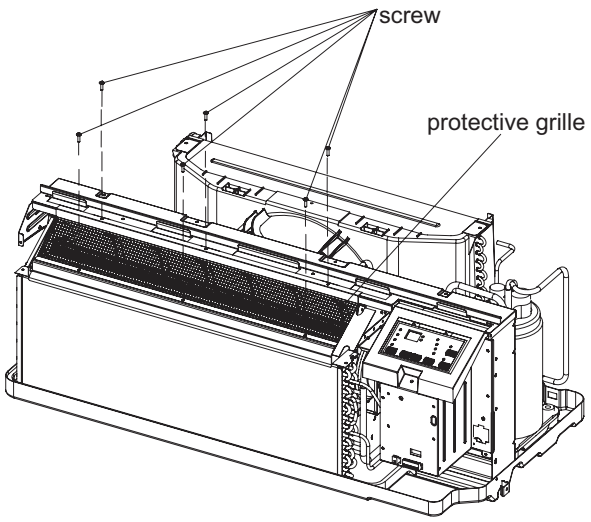
5.Remove top cover sub-assy	
Remove the 3 screws fixing the top cover and then remove the top cover.	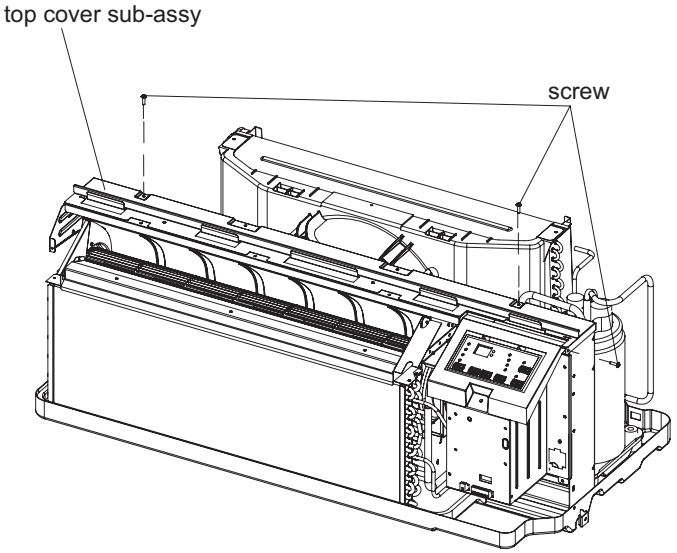
6.Remove helicoid tongue	
Remove the 4 screws fixing the helicoid tongue and then remove the helicoid tongue.	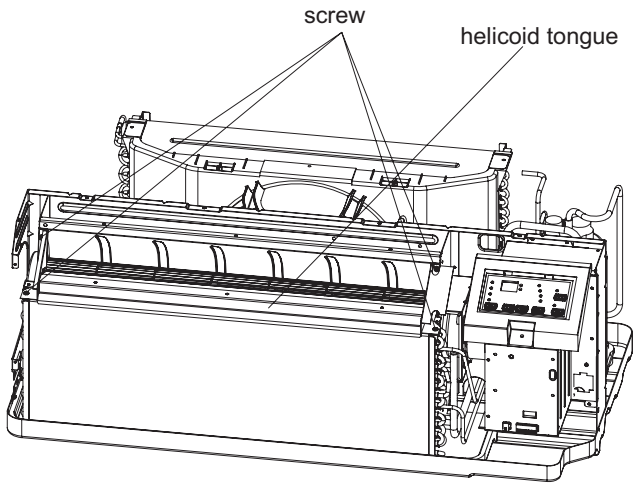

Steps	Procedure
7.Remove electric heater	
Remove the 2 screws fixing the electric heater and then remove the electric heater along the slide guide.	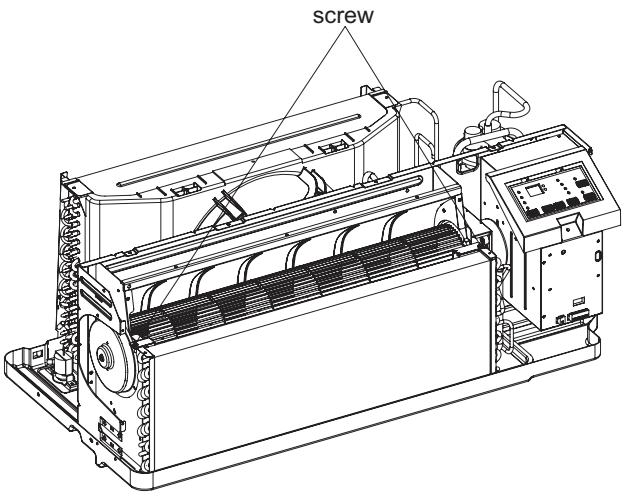 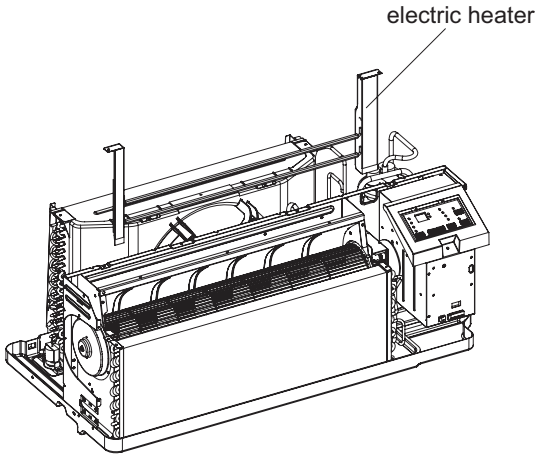
8.Remove cross flow blade	
Remove the 3 screws fixing the ring of bearing sub-assy and then remove the ring of bearing sub-assy and the cross flow blade.	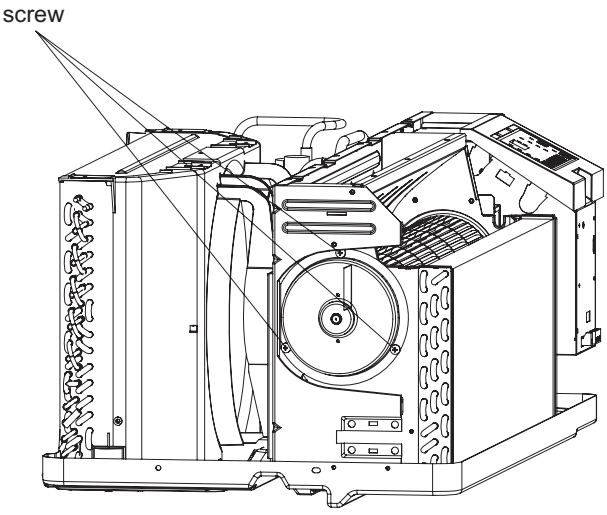

Steps	Procedure	
		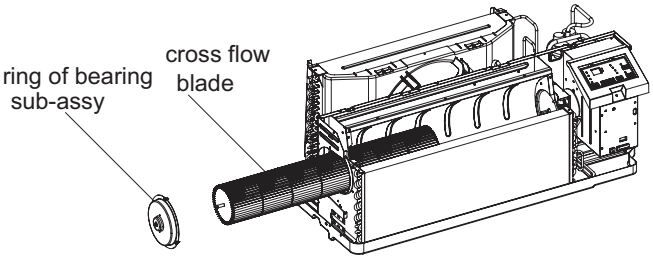
9.Remove controller and electric box		
a	Remove the screw fixing the controller cover to remove the controller cover.	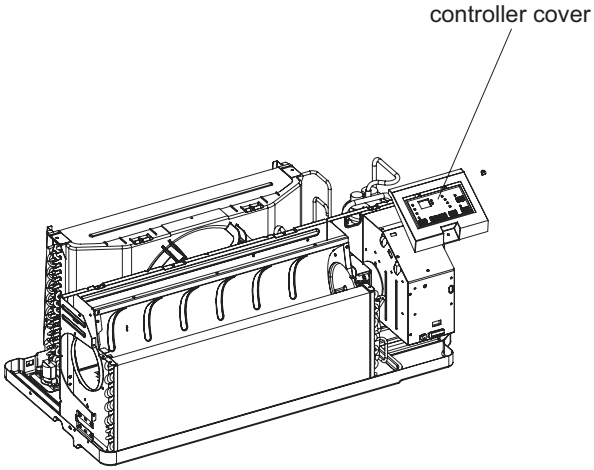
b	Remove the 2 screws fixing the electric box and disconnect the wire of the electric box to remove the electric box.	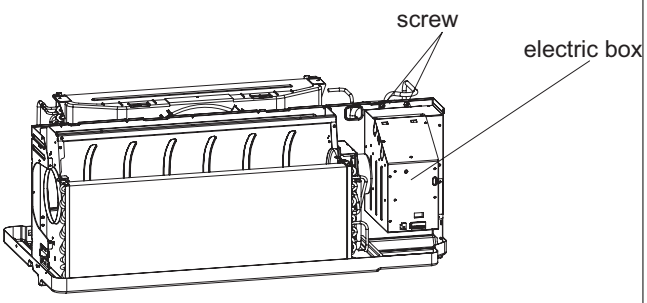

Steps	Procedure	
10.Remove middle isolation sheet		
	Remove the 6 screws fixing the middle isolation sheet and then remove the middle isolation sheet.	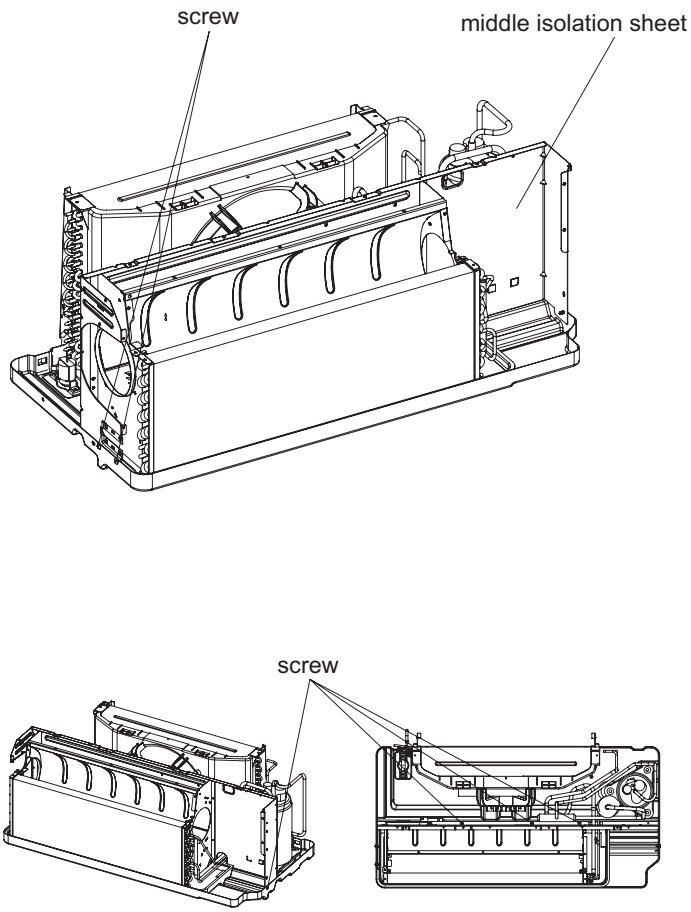
11.Remove left side plate, right side plate and air flue		
	Remove the 2 screws fixing the left side pate and right side plate; remove the left side plate, right side plate and air flue.	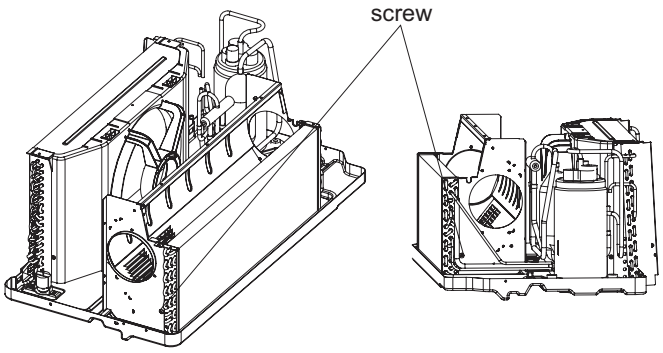

Steps	Procedure	
		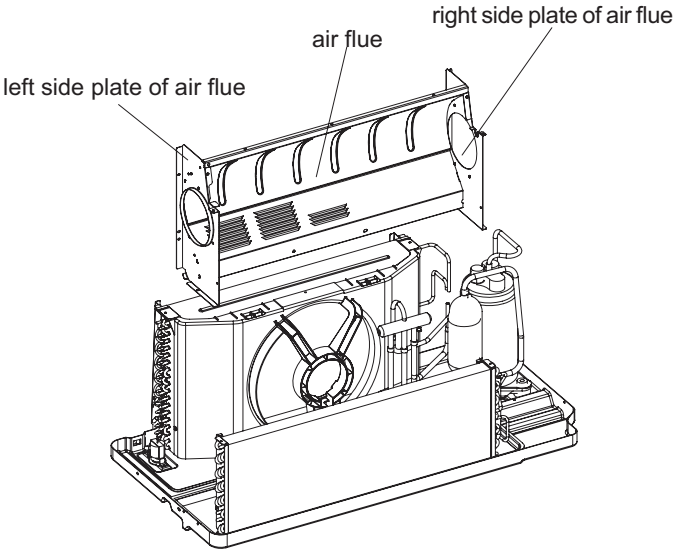
12.Remove flow-guide loop		
	Remove the 3 screws fixing the flow-guide loop cover; remove the flow-guide loop cover; remove the 4 screws fixing the flow-guide loop; remove the flow-guide loop. (no need to remove the flow-guide loop cover if not necessary)	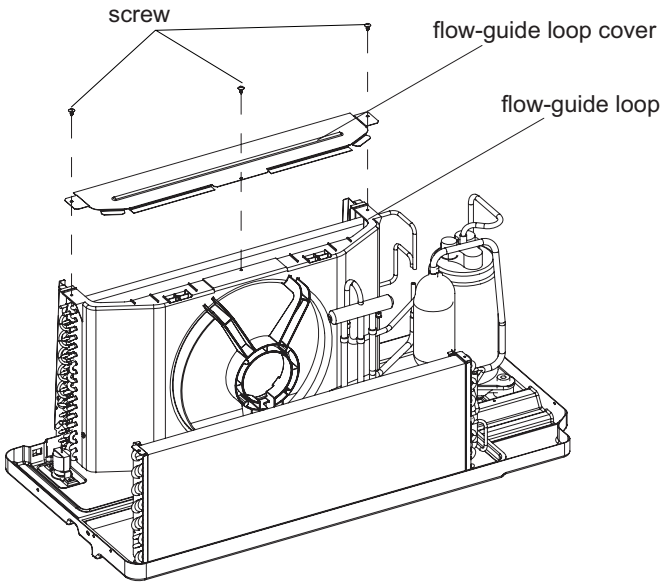 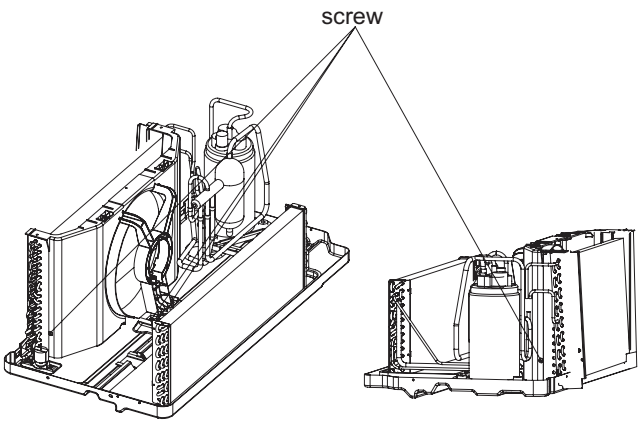

Steps	Procedure
13.Remove condenser and evaporator	
Remove the 2 screws fixing the condenser; unsolder the welding joints of the suction pipe, discharge pipe, compressor, 4-way valve with the condenser and evaporator, and then remove the condenser and evaporator. (before unsoldering, discharge the refrigerant in the pipeline completely)	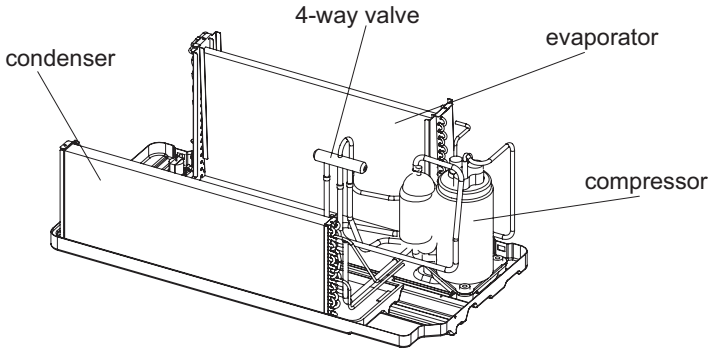 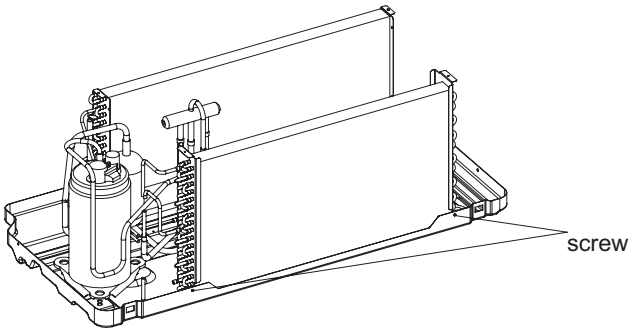
14.Remove compressor and drainage valve	
Remove the 3 foot nuts with washer fixing the compressor and then remove the compressor. Remove the 2 screws fixing the drainage valve and then remove the drainage valve.	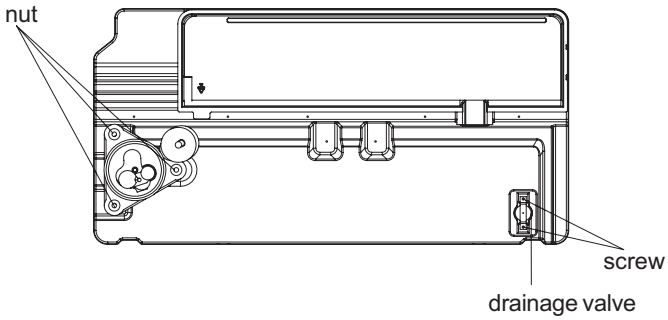

Models:
GAA07AB-D3RNB2A(CC060001801), GAA09AB-D3RNB2A(CC060002001), GAA12AB-D3RNB2A(CC060002201, CC060002206)
GAA12AB-D3RNB2B(CC060002401), GAA15AB-D3RNB2B(CC060002601), GAE07AB-D3RNB2A(CC060001701)
GAE09AB-D3RNB2A(CC060001901), GAE12AB-D3RNB2A(CC060002101), GAE12AB-D3RNB2B(CC060002301)
GAE15AB-D3RNB2B(CC060002501)

Note: Take heat pump+electric heating unit as example for the disassemly; cooling only+electric heating is a little different.

Steps	Procedure	
1.Remove panel assy and cabinet assy		
a	Hold the lower part of the panel and pat both sides of panel to separate the clasps and then remove the front panel.	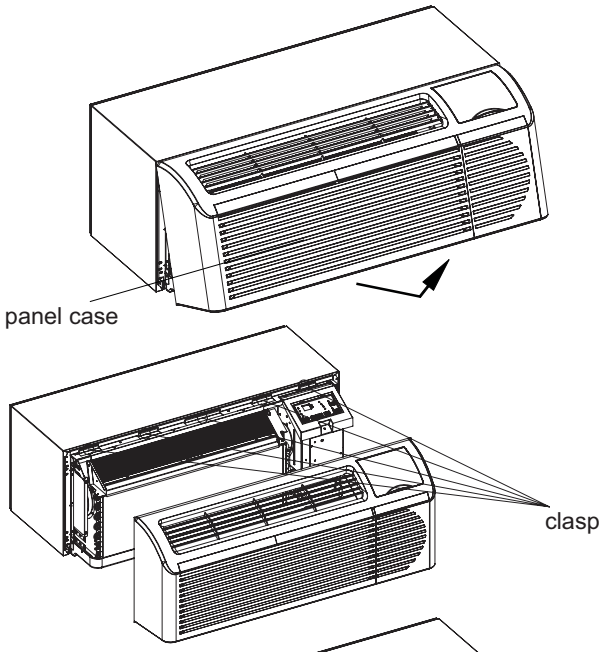
b	Remove the 4 screws fixing the cabinet assy and the remove the cabinet assy along the slide guide.	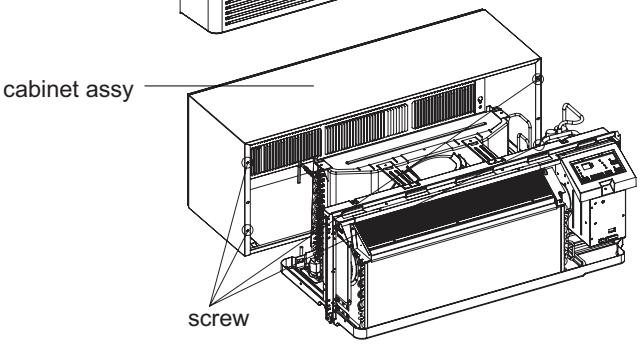
c	Hold the front part of the filter by hand, lift up the filter and then remove the filter.	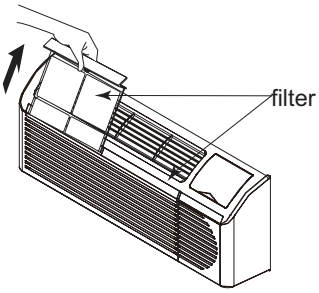

Steps	Procedure	
2.Remove middle connection board		
	Remove the 4 screws fixing the middle connection board and then remove the middle connection board.	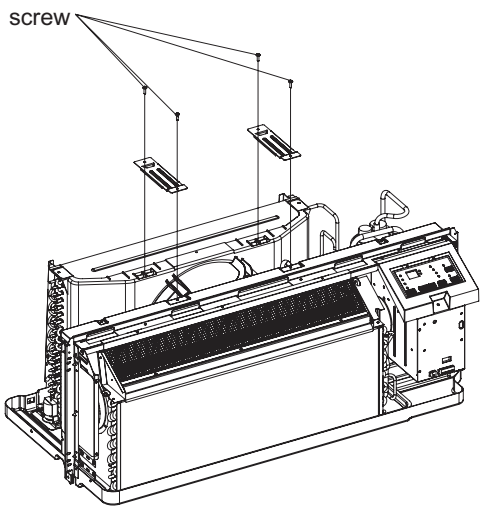
3.Remove left and right support sub-assy		
a	Remove the 4 screws fixing the left of the support and the screw fixing the baffle; remove the left support and baffle.	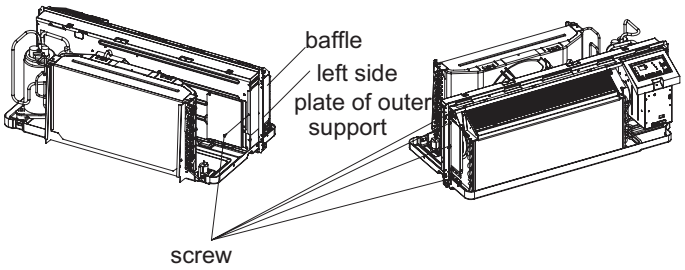
b	Remove the 3 screws fixing the right side of the support sub-assy and then remove the right support.	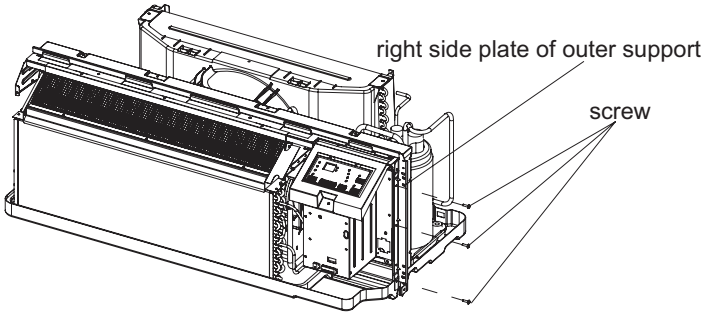

Steps	Procedure
4.Remove protective grille	
Remove the 6 screws fixing the protective grille and then remove the protective grille.	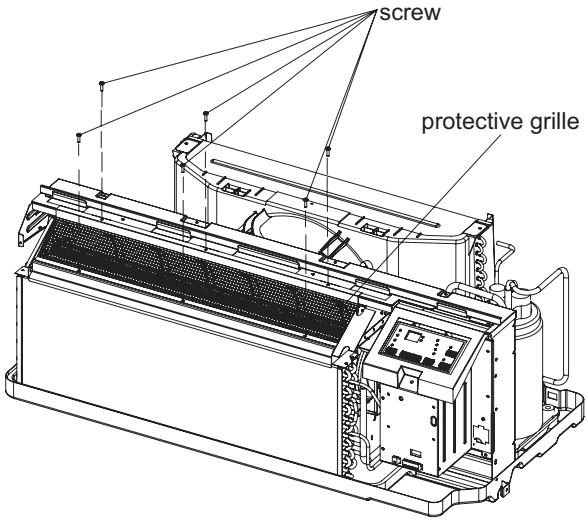
5.Remove top cover sub-assy	
Remove the 3 screws fixing the top cover and then remove the top cover.	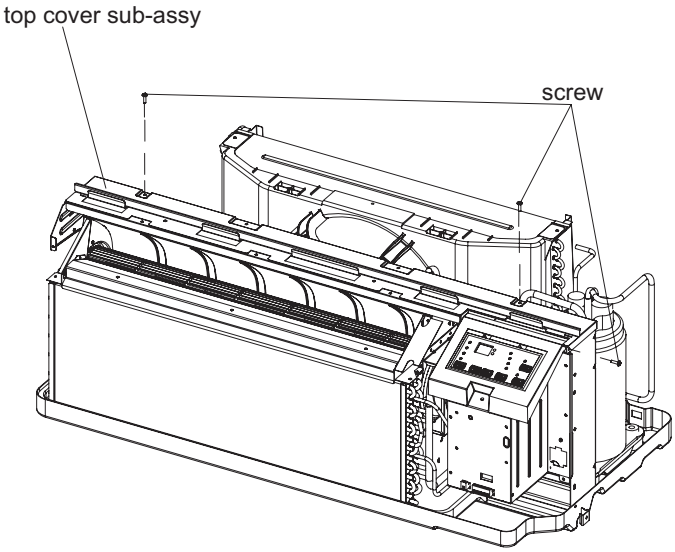
6.Remove helicoid tongue	
Remove the 4 screws fixing the helicoid tongue and then remove the helicoid tongue.	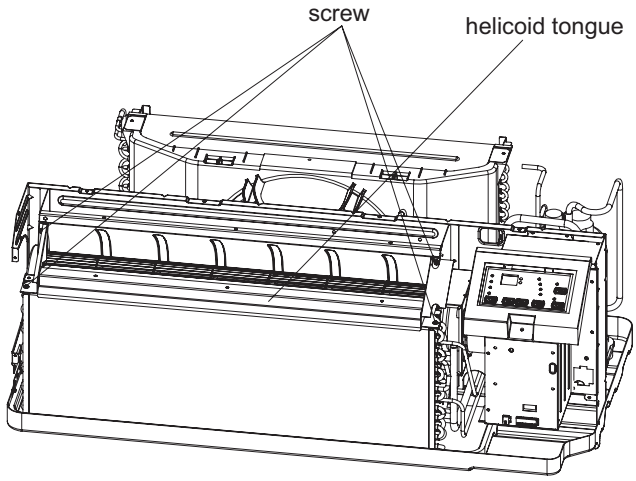

Steps	Procedure
7.Remove electric heater	
	Remove the 2 screws fixing the electric heater and then remove the electric heater along the slide guide.
8.Remove cross flow blade	
	Remove the 3 screws fixing the ring of bearing sub-assy and then remove the ring of bearing sub-assy and the cross flow blade.

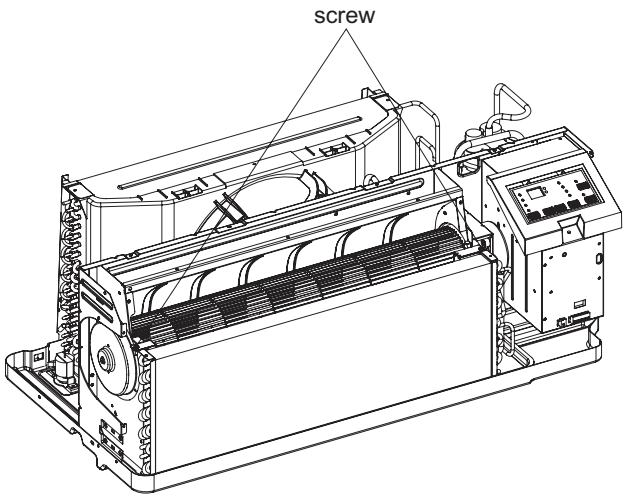

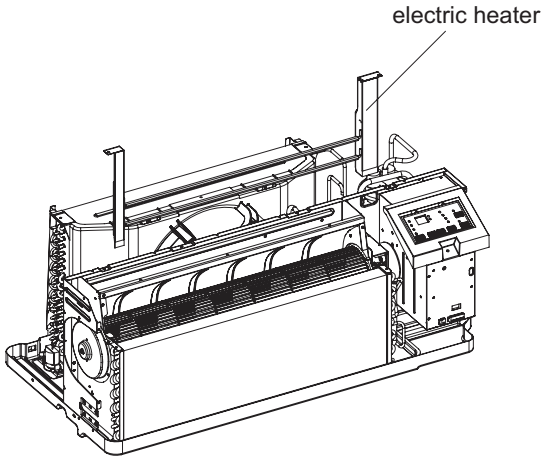

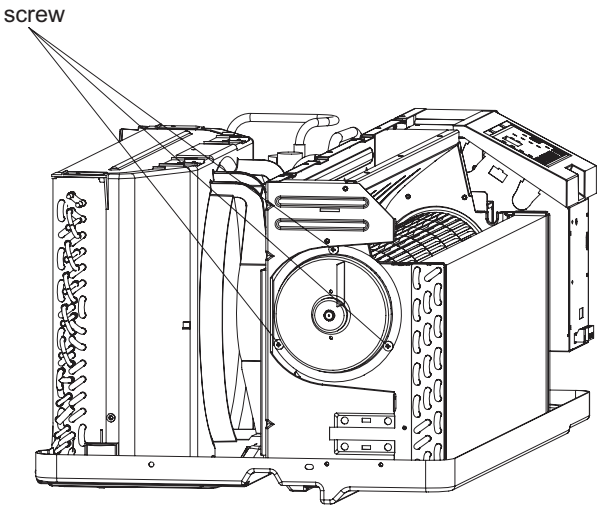

Steps	Procedure	
		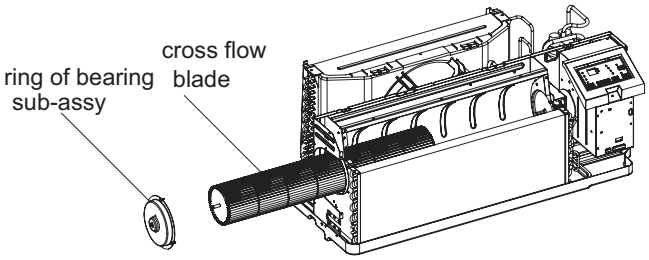
9.Remove controller and electric box		
a	Remove the screw fixing the controller cover to remove the controller cover.	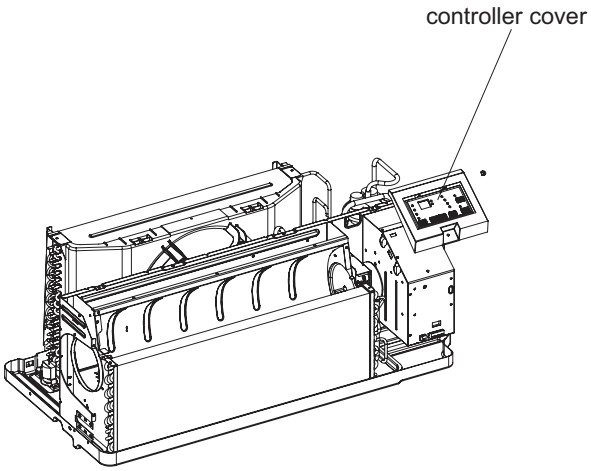
b	Remove the 2 screws fixing the electric box and disconnect the wire of the electric box to remove the electric box.	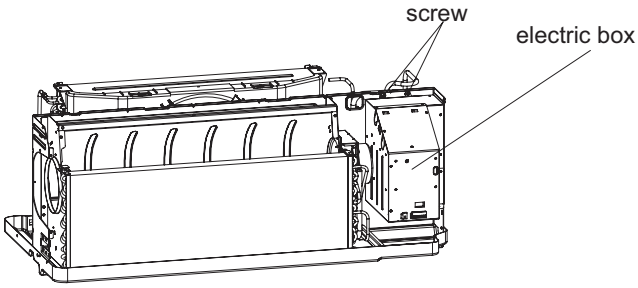

Steps	Procedure
10.Remove middle isolation sheet	
Remove the 6 screws fixing the middle isolation sheet and then remove the middle isolation sheet.	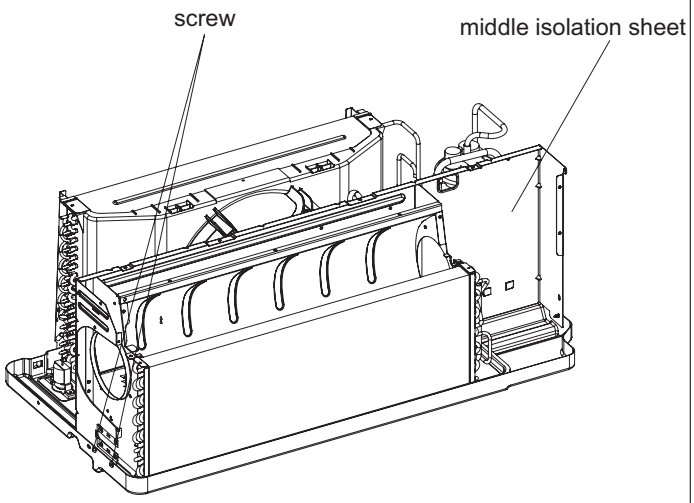 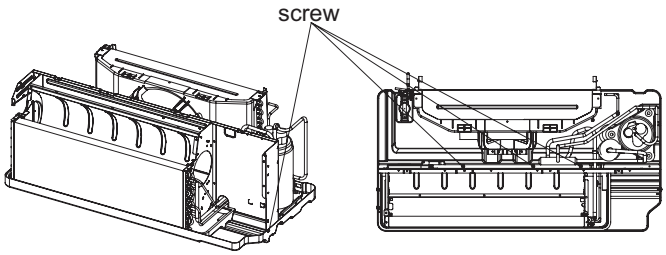
11.Remove left side plate, right side plate and air flue	
Remove the 2 screws fixing the left side pate and right side plate; remove the left side plate, right side plate and air flue.	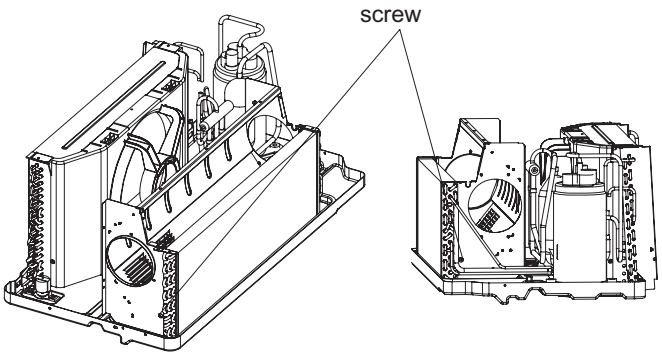

Steps	Procedure	
		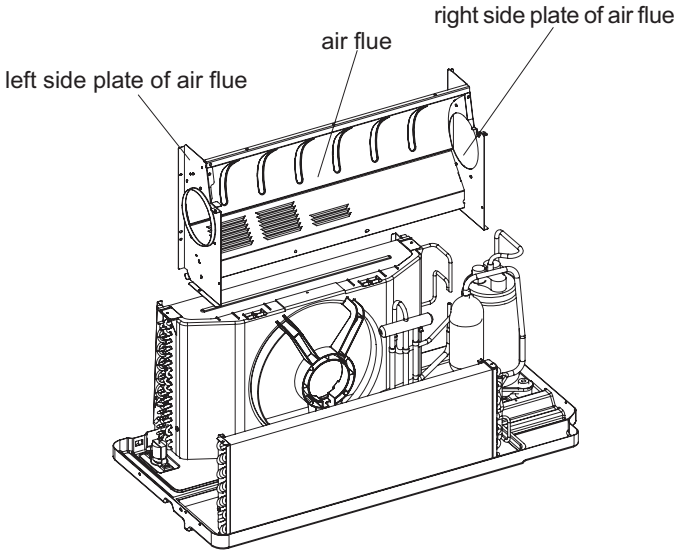
12.Remove flow-guide loop		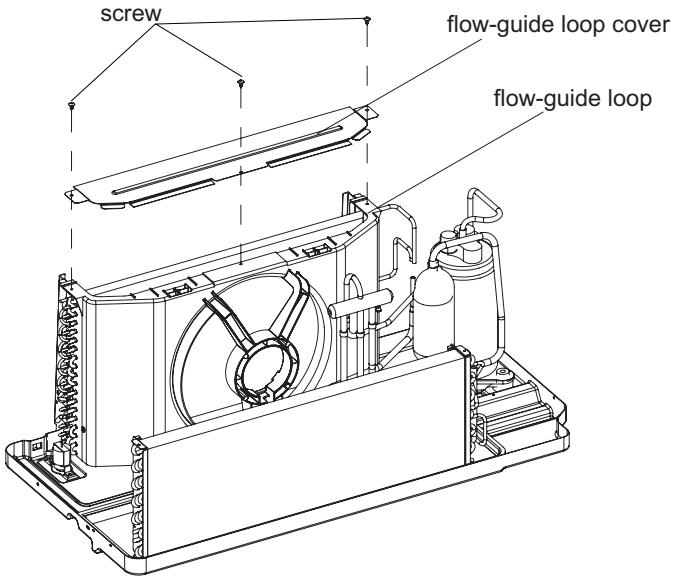
	Remove the 3 screws fixing the flow-guide loop cover; remove the flow-guide loop cover; remove the 4 screws fixing the flow-guide loop; remove the flow-guide loop. (no need to remove the flow-guide loop cover if not necessary).	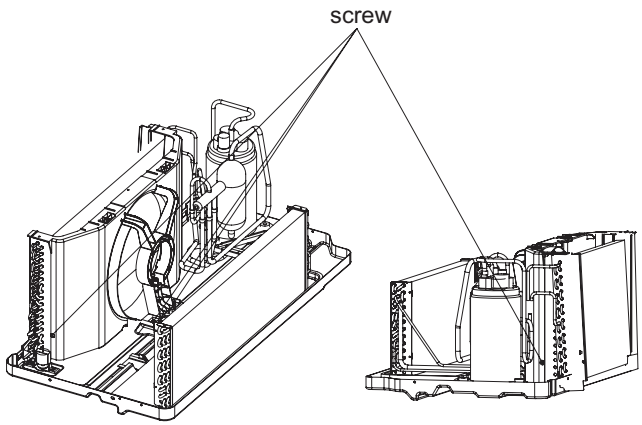

Steps	Procedure
13.Remove condenser and evaporator	
Remove the 2 screws fixing the condenser; unsolder the welding joints of the suction pipe, discharge pipe, compressor, 4-way valve with the condenser and evaporator, and then remove the condenser and evaporator. (before unsoldering, discharge the refrigerant in the pipeline completely).	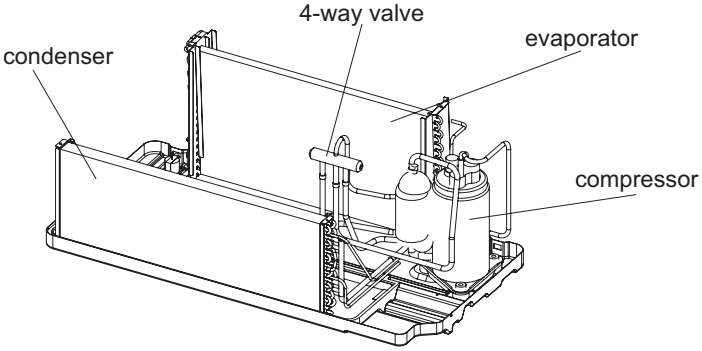 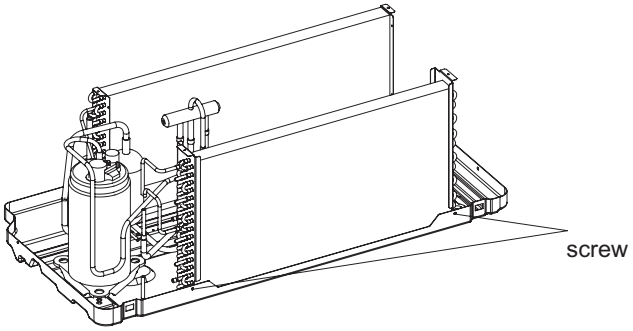
14.Remove compressor and drainage valve	
Remove the 3 foot nuts with washer fixing the compressor and then remove the compressor. Remove the 2 screws fixing the drainage valve and then remove the drainage valve.	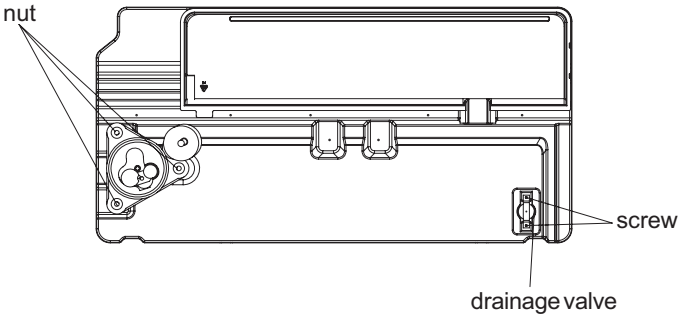

Models:
GAA07AB-D3RNB2A(CC060001802), GAA09AB-D3RNB2A(CC060002002), GAA12AB-D3RNB2A(CC060002202)
GAA12AB-D3RNB2B(CC060002402), GAA15AB-D3RNB2B(CC060002602), GAE07AB-D3RNB2A(CC060001702)
GAE09AB-D3RNB2A(CC060001902), GAE12AB-D3RNB2A(CC060002102), GAE12AB-D3RNB2B(CC060002302)
GAE15AB-D3RNB2B(CC060002502), GAA09AB-D3RNA1A(CC060027600), GAA15AB-D3RNA1B(CC060027700)

Note: Take heat pump+electric heating unit as example for the disassemly; cooling only+electric heating is a little different.

Steps	Procedure	
1.Remove panel		
a	Hold the panel and pat both sides of panel to separate the panels and then remove the front panel.	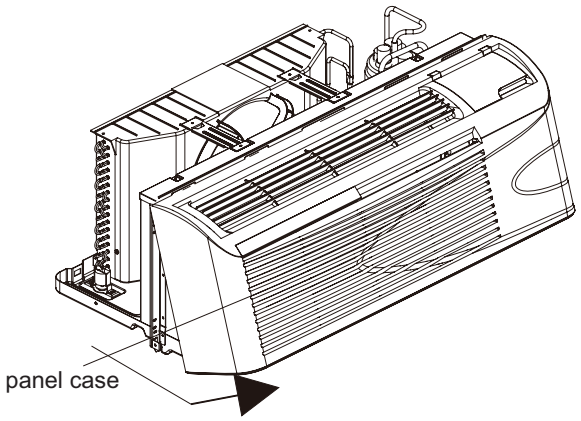 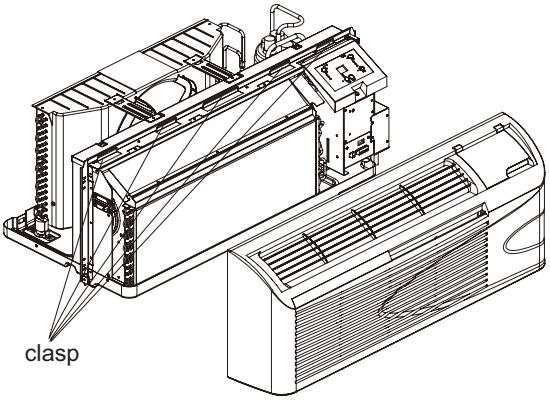
b	Hold the front part of filter by hand, lift up the filter and then remove the filter.	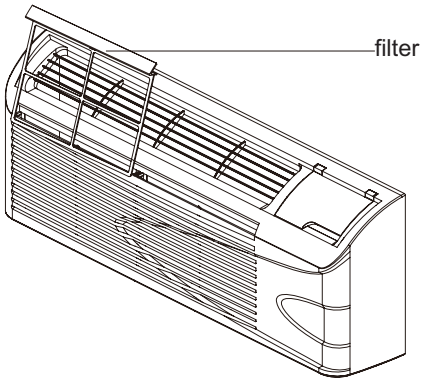

Steps	Procedure	
2.Remove middle connection board		screw
	Press the 2 clasps of filter to make it separated from the groove and then pull the filter outwards to remove it.	
3.Remove left and right support sub-assy		
a	Remove the 4 screws fixing the left of the support and the screw fixing the baffle; remove the left support and baffle.	baffle left side plate of outer support screw
b	Remove the 3 screws fixing the right side of the support sub-assy and then remove the right support.	right side plate of outer support screw

Steps	Procedure
4.Remove protective grille	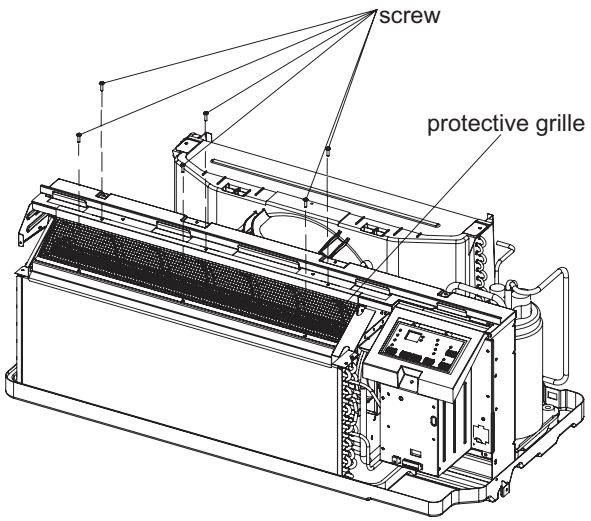
Remove the 6 screws fixing the protective grille and then remove the protective grille.	
5.Remove top cover sub-assy	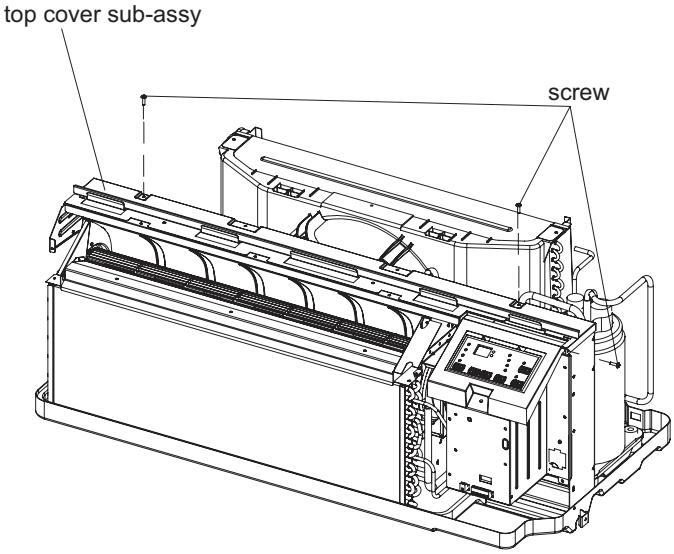
Remove the 3 screws fixing the top cover and then remove the top cover.	
6.Remove helicoid tongue	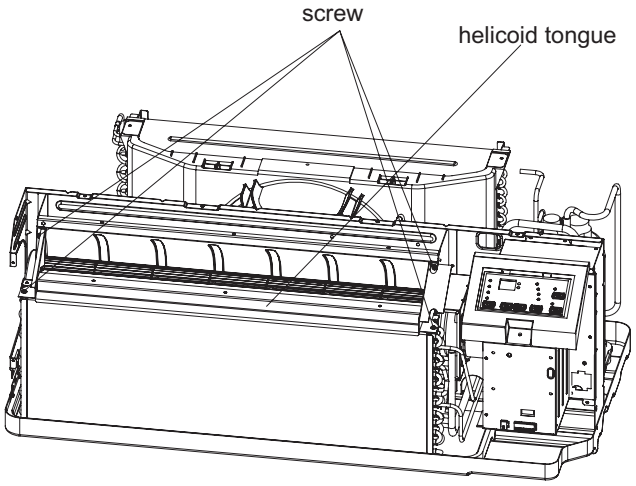
Remove the 4 screws fixing the helicoid tongue and then remove the helicoid tongue.	

Steps	Procedure
7.Remove electric heater	
Remove the 2 screws fixing the electric heater and then remove the electric heater along the slide guide.	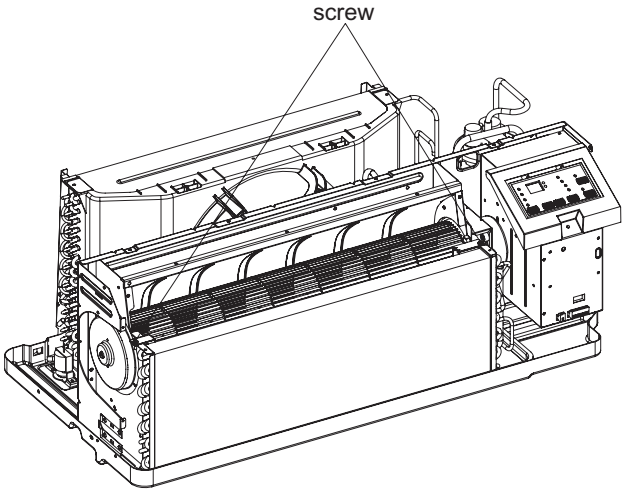 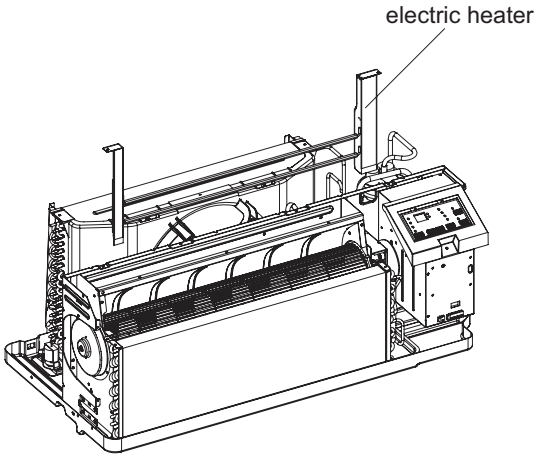
8.Remove cross flow blade	
Remove the 3 screws fixing the ring of bearing sub-assy and then remove the ring of bearing sub-assy and the cross flow blade.	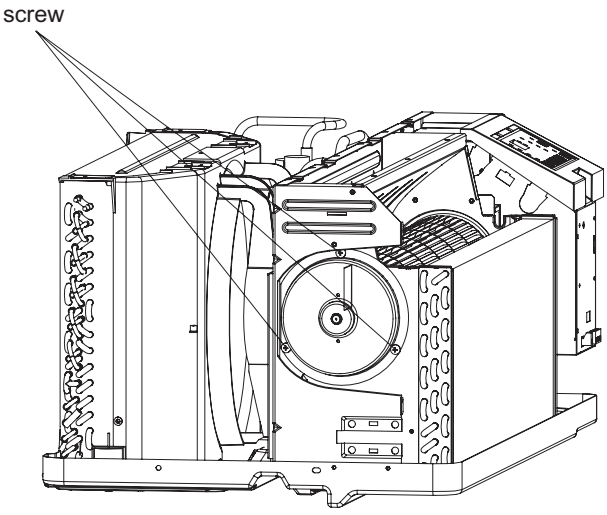

Steps	Procedure	
		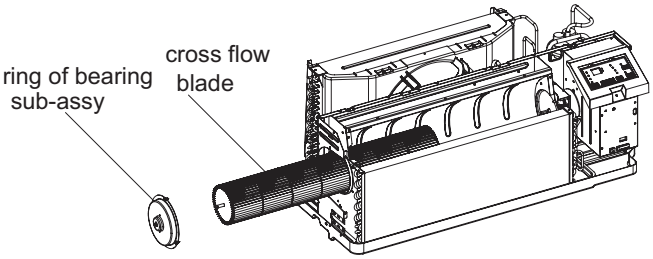
9.Remove controller and electric box		
a	Remove the screw fixing the controller cover to remove the controller cover.	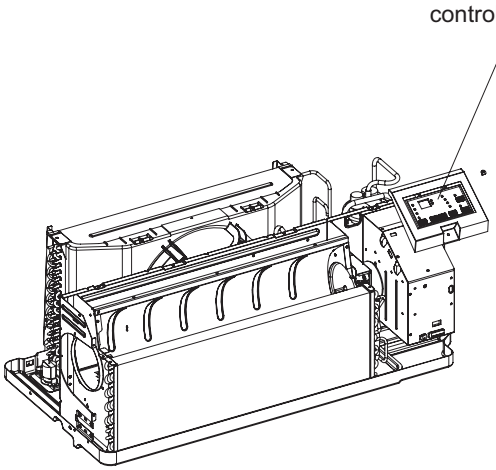
b	Remove the 2 screws fixing the electric box and disconnect the wire of the electric box to remove the electric box.	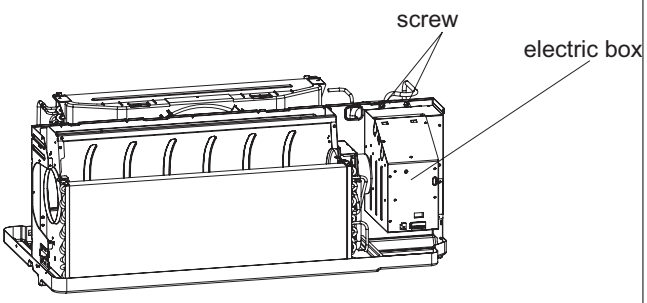

Steps	Procedure
10.Remove middle isolation sheet	
Remove the 6 screws fixing the middle isolation sheet and then remove the middle isolation sheet.	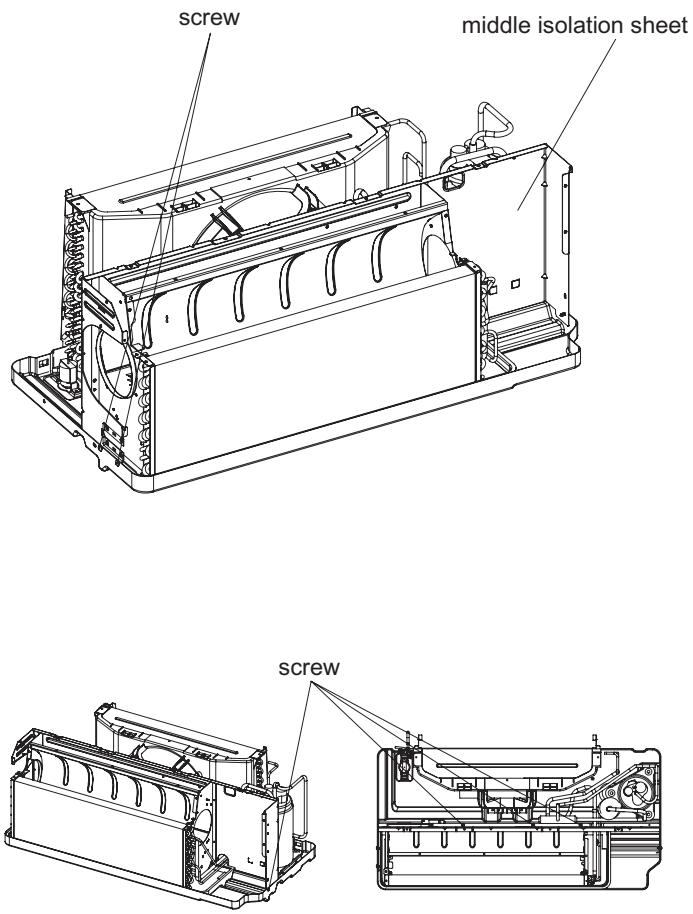
11.Remove left side plate, right side plate and air flue	
Remove the 2 screws fixing the left side pate and right side plate; remove the left side plate, right side plate and air flue.	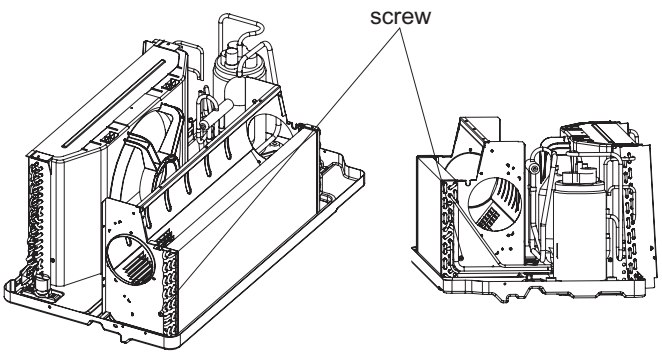

Steps	Procedure	
		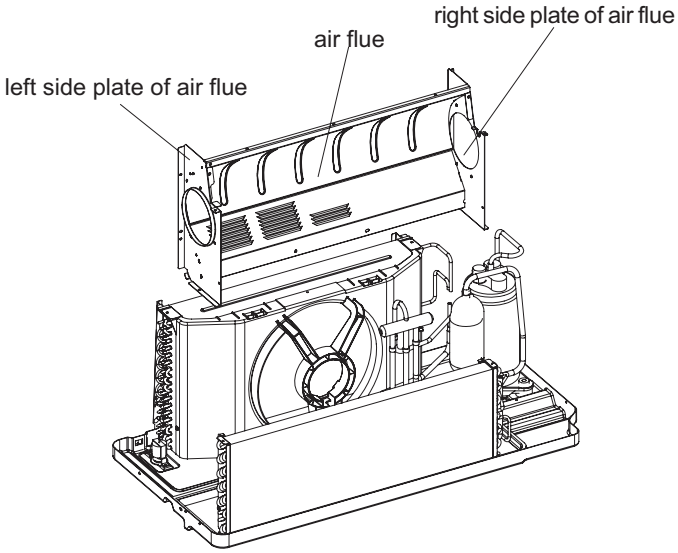
12.Remove flow-guide loop		
	Remove the 3 screws fixing the flow-guide loop cover; remove the flow-guide loop cover; remove the 4 screws fixing the flow-guide loop; remove the flow-guide loop. (no need to remove the flow-guide loop cover if not necessary)	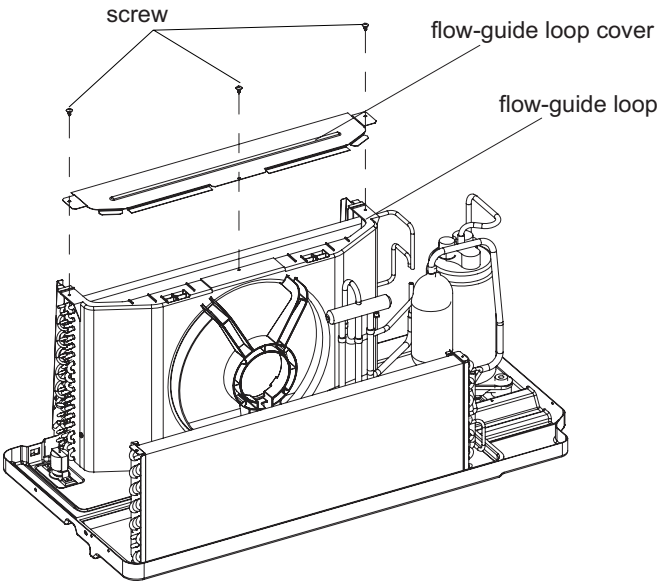 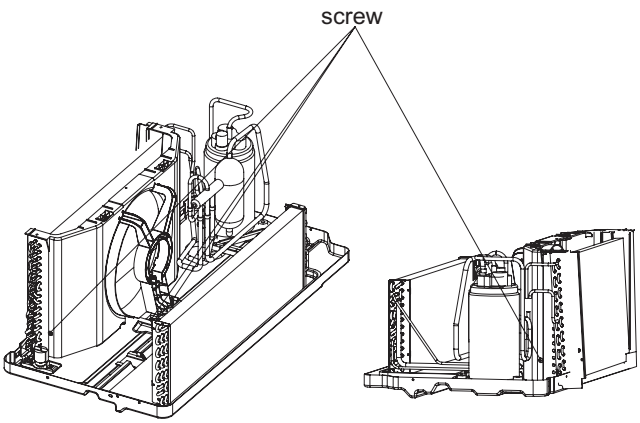

Steps	Procedure
13.Remove condenser and evaporator	
	Remove the 2 screws fixing the condenser; unsolder the welding joints of the suction pipe, discharge pipe, compressor, 4-way valve with the condenser and evaporator, and then remove the condenser and evaporator. (before unsoldering, discharge the refrigerant in the pipeline completely) 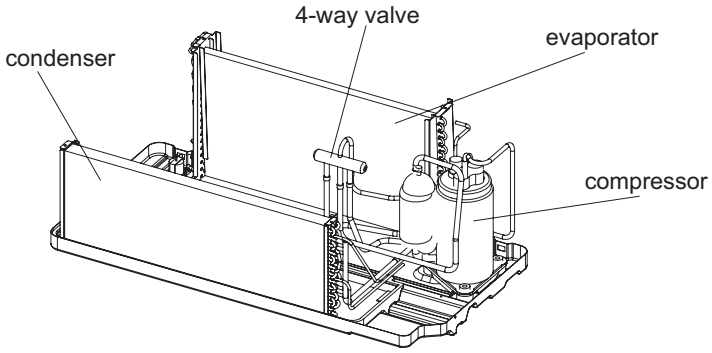 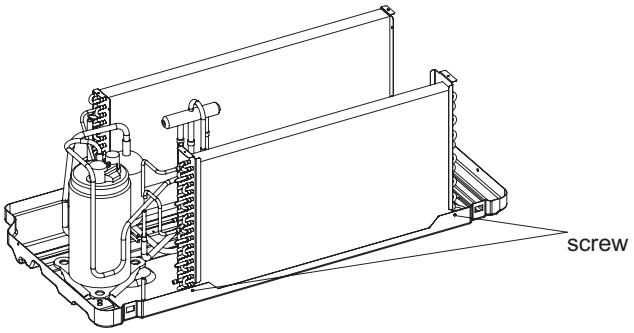
14.Remove compressor and drainage valve	
	Remove the 3 foot nuts with washer fixing the compressor and then remove the compressor. Remove the 2 screws fixing the drainage valve and then remove the drainage valve. 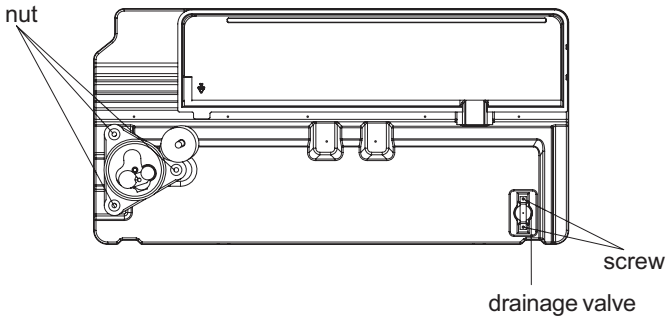

Appendix:

Appendix 1: Reference Sheet of Celsius and Fahrenheit

Conversion formula for Fahrenheit degree and Celsius degree: Tf=Tcx1.8+32

Set temperature

Fahrenheit display temperature (°F)	Fahrenheit (°F)	Celsius(°C)		Fahrenheit display temperature (°F)	Fahrenheit (°F)	Celsius (°C)		Fahrenheit display temperature (°F)	Fahrenheit (°F)	Celsius (°C)
61	60.8	16		69/70	69.8	21		78/79	78.8	26
62/63	62.6	17		71/72	71.6	22		80/81	80.6	27
64/65	64.4	18		73/74	73.4	23		82/83	82.4	28
66/67	66.2	19		75/76	75.2	24		84/85	84.2	29
68	68	20		77	77	25		86	86	30

Ambient temperature

Fahrenheit display temperature (°F)	Fahrenheit (°F)	Celsius(°C)		Fahrenheit display temperature (°F)	Fahrenheit (°F)	Celsius(°C)		Fahrenheit display temperature (°F)	Fahrenheit (°F)	Celsius(°C)
32/33	32	0		55/56	55.4	13		79/80	78.8	26
34/35	33.8	1		57/58	57.2	14		81	80.6	27
36	35.6	2		59/60	59	15		82/83	82.4	28
37/38	37.4	3		61/62	60.8	16		84/85	84.2	29
39/40	39.2	4		63	62.6	17		86/87	86	30
41/42	41	5		64/65	64.4	18		88/89	87.8	31
43/44	42.8	6		66/67	66.2	19		90	89.6	32
45	44.6	7		68/69	68	20		91/92	91.4	33
46/47	46.4	8		70/71	69.8	21		93/94	93.2	34
48/49	48.2	9		72	71.6	22		95/96	95	35
50/51	50	10		73/74	73.4	23		97/98	96.8	36
52/53	51.8	11		75/76	75.2	24		99	98.6	37
54	53.6	12		77/78	77	25				

Appendix 2: List of Resistance for Ambient Temperature Sensor

Resistance Table of Ambient Temperature Sensor (15K)

Temp(°C)	Resistance(kΩ)		Temp(°C)	Resistance(kΩ)		Temp(°C)	Resistance(kΩ)		Temp(°C)	Resistance(kΩ)
-19	138.1		20	18.75		59	3.848		98	1.071
-18	128.6		21	17.93		60	3.711		99	1.039
-17	121.6		22	17.14		61	3.579		100	1.009
-16	115		23	16.39		62	3.454		101	0.98
-15	108.7		24	15.68		63	3.333		102	0.952
-14	102.9		25	15		64	3.217		103	0.925
-13	97.4		26	14.36		65	3.105		104	0.898
-12	92.22		27	13.74		66	2.998		105	0.873
-11	87.35		28	13.16		67	2.896		106	0.848
-10	82.75		29	12.6		68	2.797		107	0.825
-9	78.43		30	12.07		69	2.702		108	0.802
-8	74.35		31	11.57		70	2.611		109	0.779
-7	70.5		32	11.09		71	2.523		110	0.758
-6	66.88		33	10.63		72	2.439		111	0.737
-5	63.46		34	10.2		73	2.358		112	0.717
-4	60.23		35	9.779		74	2.28		113	0.697
-3	57.18		36	9.382		75	2.206		114	0.678
-2	54.31		37	9.003		76	2.133		115	0.66
-1	51.59		38	8.642		77	2.064		116	0.642
0	49.02		39	8.297		78	1.997		117	0.625
1	46.6		40	7.967		79	1.933		118	0.608
2	44.31		41	7.653		80	1.871		119	0.592
3	42.14		42	7.352		81	1.811		120	0.577
4	40.09		43	7.065		82	1.754		121	0.561
5	38.15		44	6.791		83	1.699		122	0.547
6	36.32		45	6.529		84	1.645		123	0.532
7	34.58		46	6.278		85	1.594		124	0.519
8	32.94		47	6.038		86	1.544		125	0.505
9	31.38		48	5.809		87	1.497		126	0.492
10	29.9		49	5.589		88	1.451		127	0.48
11	28.51		50	5.379		89	1.408		128	0.467
12	27.18		51	5.197		90	1.363		129	0.456
13	25.92		52	4.986		91	1.322		130	0.444
14	24.73		53	4.802		92	1.282		131	0.433
15	23.6		54	4.625		93	1.244		132	0.422
16	22.53		55	4.456		94	1.207		133	0.412
17	21.51		56	4.294		95	1.171		134	0.401
18	20.54		57	4.139		96	1.136		135	0.391
19	19.63		58	3.99		97	1.103		136	0.382

Resistance Table of Ambient Temperature Sensor (20K)

Temp(°C)	Resistance(kΩ)		Temp(°C)	Resistance(kΩ)		Temp(°C)	Resistance(kΩ)		Temp(°C)	Resistance(kΩ)
-19	181.4		20	25.01		59	5.13		98	1.427
-18	171.4		21	23.9		60	4.948		99	1.386
-17	162.1		22	22.85		61	4.773		100	1.346
-16	153.3		23	21.85		62	4.605		101	1.307
-15	145		24	20.9		63	4.443		102	1.269
-14	137.2		25	20		64	4.289		103	1.233
-13	129.9		26	19.14		65	4.14		104	1.198
-12	123		27	18.13		66	3.998		105	1.164
-11	116.5		28	17.55		67	3.861		106	1.131
-10	110.3		29	16.8		68	3.729		107	1.099
-9	104.6		30	16.1		69	3.603		108	1.069
-8	99.13		31	15.43		70	3.481		109	1.039
-7	94		32	14.79		71	3.364		110	1.01
-6	89.17		33	14.18		72	3.252		111	0.983
-5	84.61		34	13.59		73	3.144		112	0.956
-4	80.31		35	13.04		74	3.04		113	0.93
-3	76.24		36	12.51		75	2.94		114	0.904
-2	72.41		37	12		76	2.844		115	0.88
-1	68.79		38	11.52		77	2.752		116	0.856
0	65.37		39	11.06		78	2.663		117	0.833
1	62.13		40	10.62		79	2.577		118	0.811
2	59.08		41	10.2		80	2.495		119	0.77
3	56.19		42	9.803		81	2.415		120	0.769
4	53.46		43	9.42		82	2.339		121	0.746
5	50.87		44	9.054		83	2.265		122	0.729
6	48.42		45	8.705		84	2.194		123	0.71
7	46.11		46	8.37		85	2.125		124	0.692
8	43.92		47	8.051		86	2.059		125	0.674
9	41.84		48	7.745		87	1.996		126	0.658
10	39.87		49	7.453		88	1.934		127	0.64
11	38.01		50	7.173		89	1.875		128	0.623
12	36.24		51	6.905		90	1.818		129	0.607
13	34.57		52	6.648		91	1.736		130	0.592
14	32.98		53	6.403		92	1.71		131	0.577
15	31.47		54	6.167		93	1.658		132	0.563
16	30.04		55	5.942		94	1.609		133	0.549
17	28.68		56	5.726		95	1.561		134	0.535
18	27.39		57	5.519		96	1.515		135	0.521
19	26.17		58	5.32		97	1.47		136	0.509

Resistance Table of Ambient Temperature Sensor (50K)

Temp(°C)	Resistance(kΩ)		Temp(°C)	Resistance(kΩ)		Temp(°C)	Resistance(kΩ)		Temp(°C)	Resistance(kΩ)
-29	853.5		10	98		49	18.34		88	4.75
-28	799.8		11	93.42		50	17.65		89	4.61
-27	750		12	89.07		51	16.99		90	4.47
-26	703.8		13	84.95		52	16.36		91	4.33
-25	660.8		14	81.05		53	15.75		92	4.20
-24	620.8		15	77.35		54	15.17		93	4.08
-23	580.6		16	73.83		55	14.62		94	3.96
-22	548.9		17	70.5		56	14.09		95	3.84
-21	516.6		18	67.34		57	13.58		96	3.73
-20	486.5		19	64.33		58	13.09		97	3.62
-19	458.3		20	61.48		59	12.62		98	3.51
-18	432		21	58.77		60	12.17		99	3.41
-17	407.4		22	56.19		61	11.74		100	3.32
-16	384.5		23	53.74		62	11.32		101	3.22
-15	362.9		24	51.41		63	10.93		102	3.13
-14	342.8		25	49.19		64	10.54		103	3.04
-13	323.9		26	47.08		65	10.18		104	2.96
-12	306.2		27	45.07		66	9.83		105	2.87
-11	289.6		28	43.16		67	9.49		106	2.79
-10	274		29	41.34		68	9.17		107	2.72
-9	259.3		30	39.61		69	8.85		108	2.64
-8	245.6		31	37.96		70	8.56		109	2.57
-7	232.6		32	36.38		71	8.27		110	2.50
-6	220.5		33	34.88		72	7.99		111	2.43
-5	209		34	33.45		73	7.73		112	2.37
-4	198.3		35	32.09		74	7.47		113	2.30
-3	199.1		36	30.79		75	7.22		114	2.24
-2	178.5		37	29.54		76	7.00		115	2.18
-1	169.5		38	28.36		77	6.76		116	2.12
0	161		39	27.23		78	6.54		117	2.07
1	153		40	26.15		79	6.33		118	2.02
2	145.4		41	25.11		80	6.13		119	1.96
3	138.3		42	24.13		81	5.93		120	1.91
4	131.5		43	23.19		82	5.75		121	1.86
5	125.1		44	22.29		83	5.57		122	1.82
6	119.1		45	21.43		84	5.39		123	1.77
7	113.4		46	20.6		85	5.22		124	1.73
8	108		47	19.81		86	5.06		125	1.68
9	102.8		48	19.06		87	4.90		126	1.64

JF00300849

GREE ELECTRIC APPLIANCES,INC.OF ZHUHAI

Add: West Jinji Rd, Qianshan, Zhuhai, Guangdong, China 519070

Tel: (+86-756) 8522218 Fax: (+86-756) 8669426

Email: gree@gree.com.cn Http://www.gree.com

HONG KONG GREE ELECTRIC APPLIANCES SALES LIMITED

Add: Unit 2612,26/F.,Miramar Tower 132 Nathan Road,TST,Kowloon,HK

Tel: (852) 31658898 Fax: (852) 31651029